KIKUSUI ELECTRONICS CORP.

1-1-3 Higashiyamata, Tsuzuki-ku, Yokohama,
224-0023, Japan
Tel: +81-45-482-6353 Fax: +81-45-482-6261

Website http://www.kikusui.co.jp/en

Communication Interface Manual

AC Power Supply

PCR-MA Series

KIKUSUI

PART NO. IA005402
Apr. 2018

Communication Interface Manual

AC Power Supply PCR-MA Series

PCR500MA
PCR1000MA
PCR2000MA
PCR4000MA

Command List

*CLS
Clears all event registers including the status byte, event status, and error queue.

*ESE
Sets the event status enable register that is counted by the event summary bit (ESB) of the status byte.

*ESR
Queries the event status register.

*IDN
Queries the model name, serial number, and firmware version of the PCR-MA.

*LRN
Queries the command that can restore the current panel settings.

*OPC
Sets the OPC bit (bit 0) of the event status register when all the commands in standby have been completed.

*OPT
Queries the optional interface board that are installed in the PCR-MA.

*PSC
Sets whether to clear the event status enable register and the service request enable register when the POWER switch is turned on (power-on status).

*RCL
Reads the contents stored in memory.

*RST
Resets a portion of the product settings.

*SAV
Stores the current panel settings to memory

*SRE
Sets the service request enable register.

*STB
Queries the contents of the status byte register and the MSS (master summary status) message.

*TRG
Trigger command.

*TST
Executes a self-test.

*WAI
Prevents the PCR-MA from executing subsequent commands until all operations in standby are complete.

ABOR
Aborts operations such as change and measurement in all trigger subsystem (TRANSient/ACQuire).

ABOR:ACQ
Aborts operations such as execute in ACQuire trigger subsystem.

ABOR:TRAN
Aborts the setting change trigger function.

DISP:AMM
Sets the measured value displayed on the lower numeric display.

INIT:ACQ
Clears the present valid measurement data and starts a new measurement.

INIT:CONT:ACQ
Sets the auto continue mode of the ACQuire subsystem.

INIT:TRAN
Starts the setting change (TRANsient) trigger function.

LXI:IDEN
Turns the identify display on or off.

FETC:<meas-item>/ MEAS:<meas-item>
Queries the scalar measurement data specified with <meas-item>.

OUTP
Turns the output on and off.

OUTP:COUP
Sets the output mode.

OUTP:PON:STAT
Sets the panel settings at power-on.

OUTP:PROT:CLE
Clears alarms.

SENS:AVER
Sets the averaging period of the measured values (excluding the peak current).

SENS:CURR:HOLD
Sets the hold time of the peak current.

SENS:CURR:HOLD:CLE
Clears the peak hold of the current measurement

CURR
Sets the AC current upper limit.

CURR:OFFS
Sets the DC current upper limit.

CURR:PROT:STAT
Sets the PCR-MA acts when the current limit is exceeded.

FREQ
Set the AC output frequency.

FREQ:LIM:LOW
Sets the lower limit value of frequency.

FREQ:LIM:UPP
Sets the upper limit value of frequency.

FREQ:MODE
Sets the trigger function control of the frequency setting when INIT/INIT:TRAN and a software trigger are sent.

FREQ:TRIG
Sets the target frequency when INIT/INIT:TRAN and a software trigger are sent.

VOLT
Sets the AC voltage.

VOLT:LIM:LOW
Sets the lower limit value of AC voltage.

VOLT:LIM:UPP
Sets the upper limit value of AC voltage.

VOLT:MODE
Sets the trigger function control of the AC voltage setting when INIT/INIT:TRAN and a software trigger are sent.

VOLT:OFFS
Sets the DC voltage.

VOLT:OFFS:LIM:LOW
Sets the lower limit value of DC voltage.

VOLT:OFFS:LIM:UPP
Sets the upper limit value of DC voltage.

VOLT:OFFS:MODE
Sets the trigger function control of the DC voltage setting when INIT/INIT:TRAN and a software trigger are sent.

VOLT:OFFS:TRIG
Sets the target DC voltage when INIT/INIT:TRAN and a software trigger are sent.

VOLT:RANG
Sets the voltage range.

VOLT:RANG:AUTO
Sets AUTO function of the voltage range.

VOLT:TRIG
Sets the target AC voltage when INIT/INIT:TRAN and a software trigger are sent.

STAT:OPER
Queries the event of the OPERation status register.

STAT:OPER:COND
Queries the condition of the OPERation status register.

STAT:OPER:ENAB
Sets the enable register of the OPERation status register.

STAT:OPER:NTR
Sets the negative transition of the OPERation status register.

STAT:OPER:PTR
Sets the positive transition of the OPERation status register.

STAT:QUES
Queries the event of the QUEStionable status register.

STAT:QUES:COND
Queries the condition of the QUEStionable status register.

STAT:QUES:ENAB
Sets the enable register of the QUEStionable status register.

STAT:QUES:NTR
Sets the negative transition of the QUEStionable status register.

STAT:QUES:PTR
Sets the positive transition of the QUEStionable status register.

STAT:PRES
Resets the ENABle, PTRansition, and NTRansition filter registers of all status registers (including sub registers) to their default values

SYST:COMM:GPIB:ADDR
Sets the GPIB address.

SYST:COMM:LAN:CONT
Queries the TCP port number used by SCPI-RAW.

SYST:COMM:RLST
Sets the operation of the PCR-MA to local or remote.

SYST:COMM:TCP:CONT
Queries the TCP port number used by SCPI-RAW.

SYST:COMM:USB:ADDR
Queries the address information of the USB interface.

SYST:CONF:TRAC
Sets whether to display communication errors by performing a debug trace.

SYST:ERR
Reads the oldest error information or event information from the error queue.

SYST:ERR:COUN
Queries the number of unread errors in the error queue.

SYST:KLOC
Sets and releases the panel operation lock (keylock).

SYST:LOC/ SYST:REM/ SYST:RWL
This is an old style command.

SYST:OPT
Queries the option that are installed in the PCR-MA.

SYST:VERS
Queries the version of the SCPI specifications to which the PCR-MA conforms.

TRIG:ACQ
Executes a software trigger for a ACQuire trigger subsystem.

TRIG:ACQ:SOUR
Sets the condition (trigger source) that determines when the ACQuire trigger subsystem actually starting the measuremen after the PCR-MA receives the INIT:ACQ command.

TRIG:TRAN
Executes a software trigger for the TRANsient trigger subsystem.

TRIG:TRAN:SOUR
Sets the condition (trigger source) that determines when the TRANsient trigger subsystem actually changing the setting after the PCR-MA receives the INIT:TRAN command.

TRIG:SYNC:PHAS
Sets the phase angle of the OUTPUT on.

TRIG:SYNC:SOUR
Sets the OUTPUT on phase control when OUTP ON is sent.

Introduction

The PCR-MA series Communication Interface Manual explains the settings and commands for remotely controlling the PCR-MA series.

- USB interface (standard equipped)
- LAN interface (standard equipped)
- GPIB interface (Optional)

When the PCR-MA series is operating under remote control,the REMOTE LED on the display on the front panel lights. To switch from remote mode to local mode from the panel, press LOCAL.

■ Reading environment

This manual can be viewed by the following environment.
PDF Reader: Adobe Reader

■ Intended readers

This manual is written for readers with sufficient basic knowledge of how to control instruments using a PC.

Familiarize yourself with the syntax of the SCPI commands that are used with the product before you use them.

■ Trademarks

Microsoft and Windows are registered trademarks of Microsoft Corporation in the United States and/or other countries.

All other company names and product names used in this manual are trademarks or registered trademarks of the respective company.

■ Firmware version of the product to which this manual applies

This manual applies to products with the following firmware version:
Ver.1.0x

■ Instrument Interface Standards

The PCR-MA conforms to the following standards.

- IEEE Std 488.2-1992 IEEE Standard Codes, Formats, Protocols, and Common Commands For Use With IEEE Std 488.1-1987
- IEEE Std 488.1-1987 IEEE Standard Digital Interface for Programmable Instrumentation
- Standard Commands for Programmable Instruments (SCPI) version 1999.0
- Universal Serial Bus Specification Rev 2.0
- Universal Serial Bus Test and Measurement Class Specification (USBTMC) Rev 1.0
- Universal Serial Bus Test and Measurement Class, Subclass USB488 Specification (USBTMC-USB488) Rev 1.0
- TCP/IP Instrument Protcol Specification VXI-11
- TCP/IP-IEEE488.2 Interface Specification VXI-11.3
- 1.5 LXI Device Specification 2016
- IVI-6.1 IVI High-Speed LAN Instrument Protocol (HiSLIP) Rev 1.0
- VPP-4.3 The VISA Library 2010 Rev 5.0

■ Copyright and publication

Installing the VISA Library

VISA (Virtual Instrument Software Architecture) is a specification for standard software that is used to connect instruments. VISA was defined by the IVI Foundation.

A VISA library is required to use the software application. The VISA library (NI-VISA, Keysight VISA, or KI-VISA) must be installed on the controller (Windows).

One of the VISA libraries (driver software implemented in compliance with the VISA specifications) below is necessary.

- NI-VISA by National Instruments (Ver. 5.1.1 or later)
- Keysight VISA by Keysight Technologies (Keysight IO Libraries Suite16.0 or later)
- KI-VISA Ver. 5.0.4 or later

- Note -
If your VISA library is an older version than that specified, you may not be able to use it depending on the interface.

Interface Setup

The PCR-MA is equipped with USB and LAN interfaces as standard.

There is no need to switch interfaces. All interfaces can be used simultaneously.

Each interface can be set to OFF in CONFIG settings.

USB

LAN

Accessing and Operating the PCR-MA from a Web Browser (LAN interface)

GPIB (Optional)

USB

A device driver supporting USB T&M Class (USBTMC) is required to control the PCR-MA through the USB interface. The USBTMC driver is automatically installed by the VISA library.

■ USB connection

Use a standard USB cable to connect the PCR to the computer.

■ USB setting

The factory default USB setting is “USB enabled.”

For datails of CONFIG settings, see the PCR-MA user's manual.

1. **Press CONFIG several times until interface”IntF” is displayed.**
2. **Turn the rotary knob to select USB"USb", and then press the CONFIG.**
3. **Trun the rotary knob to select ON.**
   Pressing CONFIG displays the vendor ID and product ID.
4. **Wait at least 5 seconds, and then turn the POWER switch off and on.**

■ Service request

The PCR-MA is equipped with service request and serial polling functions.

■ USB function

Complies with USB Specification 2.0

Complies with USBTMC Specification 1.0 and USBTMC-USB488 Specification 1.0

Data rate: 480 Mbps maximum (High speed)

VID (Vender ID)
0x0B3E

PID (Product ID)
PCR500MA: 0x1050
PCR1000MA: 0x1051
PCR2000MA: 0x1052
PCR4000MA: 0x1053

LAN

⚠WARNING

If a network problem occurs, an unexpected dangerous voltage may occur that may cause electric shock, fire, physical damage to the DUT, and so on. If you are going to remotely control the PCR-MA from a distance, install a Web camera or take other measures to monitor the status.

To use the LAN interface to control the PCR-MA, middleware that supports the VXI-11/ HiSLIP/ SCPI-RAW protocol must be installed on the controller. The middleware is installed automatically by the VISA library.

There is a Web browser interface to the PCR-MA embedded in the LAN interface board. You can configure the LAN interface settings from your PC's Web browser.

For information on topics such as connecting to your corporate LAN, your IP address, your host name, and security, contact your network administrator.

If you are using a host name (a Bonjour host name), you have to install Apple Bonjour.

■ LAN connection

Use a standard LAN cable (category 5 and straight) to connect the PCR-MA to a network hub or router. Use a crossover cable when making a direct connection.

■ LAN setting

The factory default LAN setting is “LAN enabled, IP address assignment method: AUTO.”

Normally set the IP address assignment method to AUTO to assign the IP address automatically.

For datails of CONFIG settings, see the PCR-MA user’s manual.

1. **Press CONFIG several times until interface”IntF” is displayed.**
2. **Turn the rotary knob to select LAN”LAn”, and then press the CONFIG.**
3. **Trun the rotary knob to select ON.**
4. **Press CONFIG several times until IP address assignment method”Adr” is displayed.**
   The assigned IP address is displayed first and then the IP address assignment method.
5. **Trun the rotary knob to select AUTO.**
   Select MANUAL"MAnL" to set IP address.
6. **Press CONFIG to select LAN reset “boot”.**
   The LAN settings are also applied by turning the power off and then back on.
7. **Trun the rotary knob to select APPL.**
8. **Press ENTER.**

⚠WARNING

Possible damage to the equipment and electric shock. The LAN interface can be accessed from any place on the network. If necessary, configure the security settings. You can apply password protection for security, and you can restrict the IP addresses to limit the hosts.

- Note -
The LAN interface should be shifted remotely by the command (SYST:COMM:RLST). Be sure to include this command at the start of the program when you are performing remote programming.

■ Service request

The PCR-MA is equipped with service request and serial polling functions.

■ LAN function

The PCR-MA may require an Internet connection depending on the how the PCR-MA is accessed through a Web browser.

Complies with the LXI 1.4 Core 2011

Complies with the VXI-11/ HiSLIP/ SCPI-RAW protocol

Communication speed: Maximum 100 Mbps (Auto negotiation)

NON AUTO MDIX function

Web browser access
Instrument information, network information, display of VISA resource information, changing network settings, security setting, Use of temporary control application

■ Resetting the LAN interface

You can use the CONFIG settings to reset the LAN interface (boot: LCI).

When reset, network settings are changed as follows.

Item	Default Value
Assignment Method	DHCP:ON, Auto-IP:ON, Static:OFF
DNS Server Assignment	0.0.0.0
WINS Server Assignment	0.0.0.0
Enable Dynamic DNS	Enable
Enable mDNS	Enable
Enable NetBIOS Over TCP/IP	Enable

To also reset the Hostname and Description, use the Web browser interface.

Accessing and Operating the PCR-MA from a Web Browser (LAN interface)

You can use the LAN interface to configure detailed settings from a Web browser on your PC. Use latest version of browser.

The Web site's URL is defined by adding "http://" in front of the PCR-MA's IP address.

When you are using a VISA library, a function is available that enables the application program (such as National Instruments NI-MAX, Keysight Connection Expert, and Kikusui KI-VISA Instrument Explorer) to retrieve the VXI-11 measuring instrument. This function is provided by VISA vendors. You can access the PCR-MA by clicking on the hyperlink that is provided in the retrieval results.

You can also check the IP address with CONFIG and then directly enter the URL in the browser’s address bar.

(Example) When the IP address is 169.254.7.8
http://169.254.7.8

■ WELCOME page

When you access the PCR-MA from a Web browser, the WELCOME page is displayed first.

The instrument information, network information, and VISA resource (I/O resource) information appear on the display. Click items in the navigation menu to move to the other pages.

■ Remote Control page

You can remotely control the PCR-MA from a browser. The various buttons have the same functions as those on the front panel of the PCR-MA.

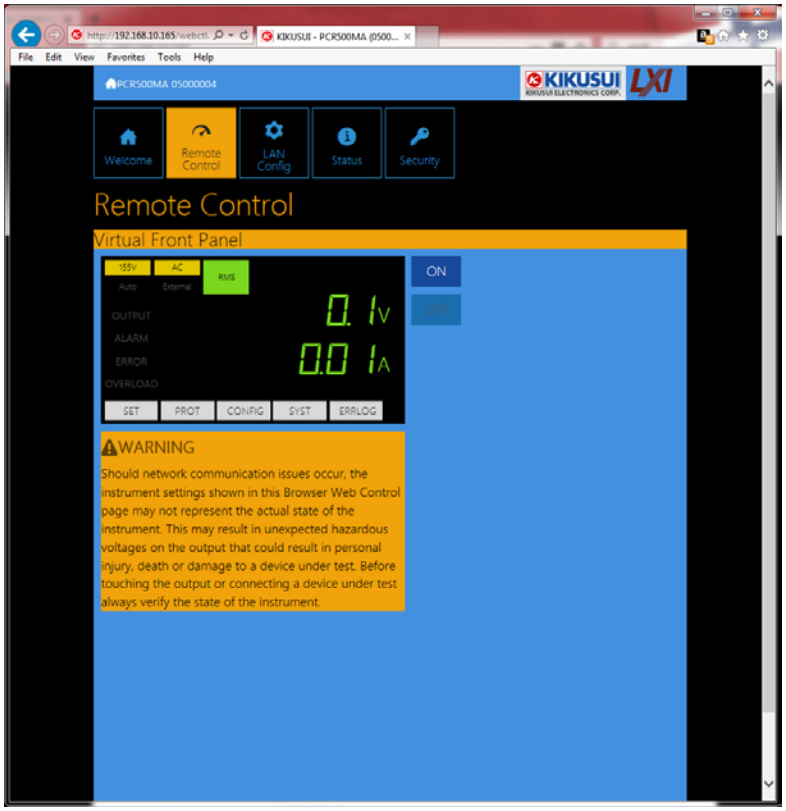

■ LAN Config page

You can display (View Mode) and change (Modify Mode) the network settings.

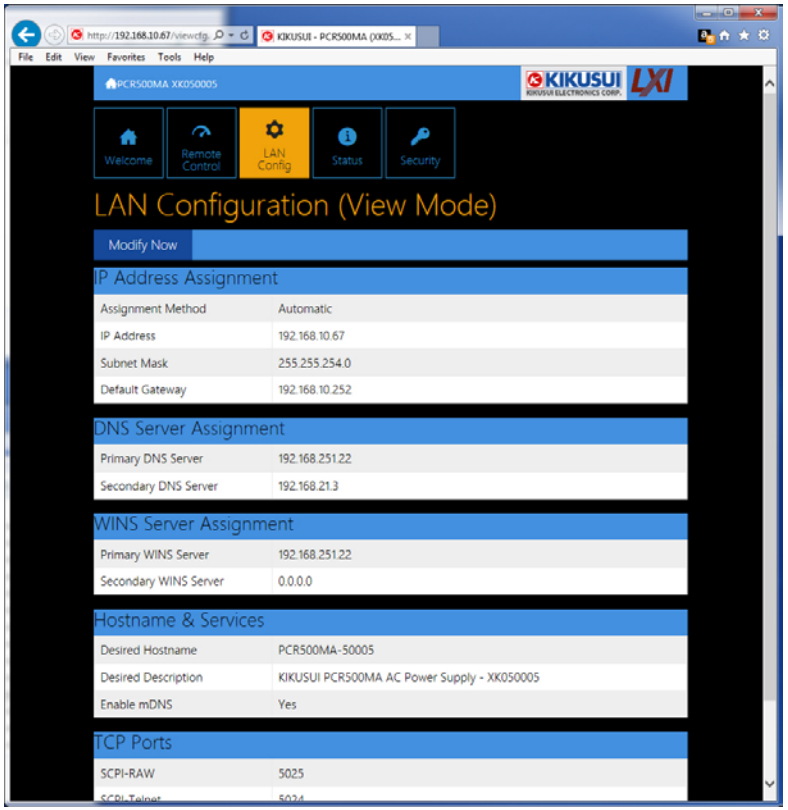

Navigation (View Mode)

Modify Now: Goes to the network setting item editing screen (Modify Mode).

Navigation (Modify Mode)

Undo: Returns the edited contents to the state before editing.

Apply: Applies the edited contents.

Reset: Resets the network settings.

Default: Returns the network settings to the factory default settings.

Back to View Mode: Goes to the network setting item viewing screen (View Mode).

IP Address Assignment

You can set the IP address. You can choose between automatic assignment and assignment of a fixed address.

In the case of automatic assignment of IP address, we recommend using the DHCP server function using a router as far as possible.

If the DHCP server function is not used, it takes about 60 seconds until determination that address assignment with DHCP has failed. Then, an address between 169.254.0.0 to 169.254.255.255 is assigned by link local address (Auto-IP).

DNS Server Assignment

Sets the address of the DNS server.

WINS Server Assignment

Sets the address of the WINS server.

Hostname & Services

You can set the host name and so on. If you set the host name, you can use it in place of the IP address to access the LAN interface. Normally, we recommend that you select “Enable Dynamic DNS”, “Enable mDNS”, and “Enable NetBIOS Over TCP/IP”.

If you leave the Hostname and Description boxes empty and click “Apply,” the host name will be created from the model name and serial number.

TCP Ports (View Mode)

The number of the TCP port in use is displayed. You cannot change the port number.

Reset and factory default settings

Clicking Reset and Default changes the network settings change as follows.

The items with an X mark are returned to their default values.

Reset	Default	Item	Default Value
X	X	Assignment Method	DHCP:ON, Auto-IP:ON, Static:OFF
X	X	DNS Server Assignment	0.0.0.0
X	X	WINS Server Assignment	0.0.0.0
	X	Desired Hostname	<Model name> - <Last 5 digits of serial number>
	X	Desired Description	KIKUSUI <Model name> AC power supply - <Serial number>
X	X	Enable Dynamic DNS	Enable
X	X	Enable mDNS	Enable
X	X	Enable NetBIOS Over TCP/IP	Enable

■ Status page

Displays the license information of the open-source software.

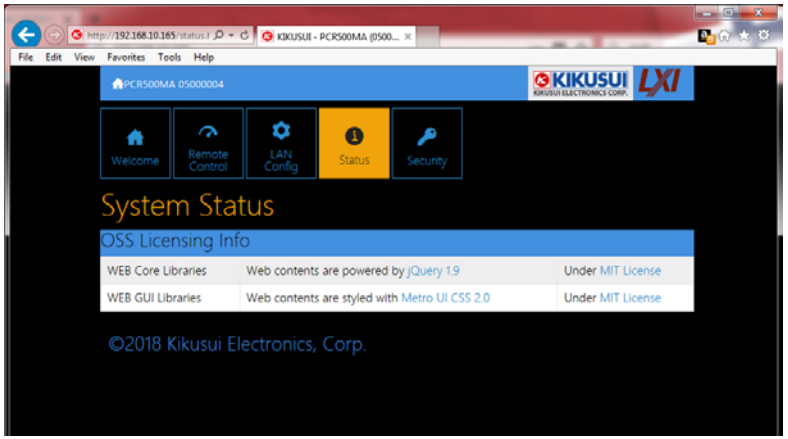

■ Security page

You can set and change the password for the Web browser interface here.

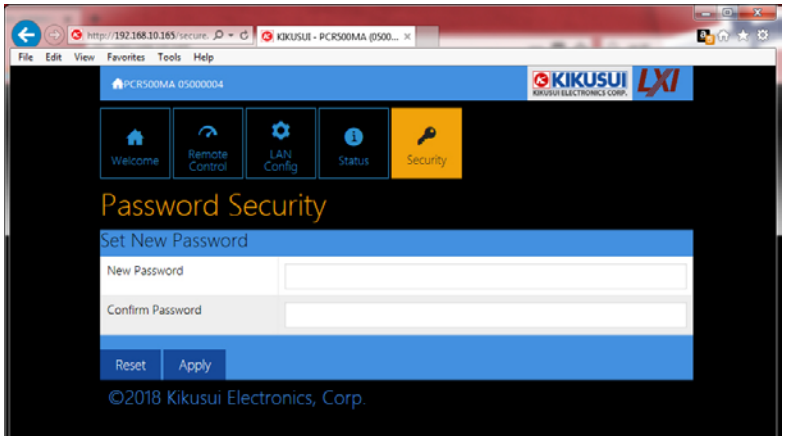

When a password has been set, that password is required in order to use the following functions.

Remote control from Remote Control page
Editing of LAN Configuration page
Changing/deleting the password

Set New Password

Enter the password.

You can use alphanumeric characters, hyphens, and underscores for the password. 15 characters maximum. The first character should be an alphabetical character. The maximum password length is 15 characters.

Changing/deleting the password

After the password has been set, the screen for changing the password appears when you enter the password.

To change the password, enter the present password in “Current Password”, enter the new password in “New Password”and “Confirm Password”, and then click “Apply”.

To disable password protection, enter the present password in “Current Password”, leave “New Password”and “Confirm Password” blank, and click “Apply”.

If you forget the password

If you forget the password, reset the LAN interface setting in the CONFIG settings or initialize the PCR-MA to its factory default settings.

For datails of CONFIG settings, see the PCR-MA user's manual.

GPIB (optional)

This interface is valid only when the optional GPIB interface board is installed.

■ GPIB connection

Use a standard IEEE488 cable to connect the PCR-M to the computer.

■ GPIB configuration

1. **Press CONFIG several times until interface"IntF" is displayed.**
2. **Turn the rotary knob to select GPIB"488", and then press the CONFIG.**
3. **Trun the rotary knob to select ON.**
4. **Press CONFIG to select the GPIB address setting "Adr".**
5. **Turn the rotary knob to set the GPIB address.**
6. **Wait at least 5 seconds, and then turn the POWER switch off and on.**

■ Service request

Service request and serial polling functions are implemented.

■ GPIB function

Function	Subset	Description
Source handshaking	SH1	Full capability
Acceptor handshaking	AH1	Full capability
Talker	T6	Function available
Listener	L4	Function available
Service request	SR1	Full capability
Remote local	RL1	Full capability
Parallel polling	PP0	No capability
Device clear	DC1	Full capability
Device trigger	DT1	Full capability
Controller	C0	No capability
Electrical interface	E1	Open collector driver

Overview of Command

The information that is exchanged between the controller (PC) and the device (PCR-MA series) is called a message.

The PCR-MA uses the SCPI language for the messages.

There are two types of messages, commands that are sent from the PC to the PCR-MA and responses that are sent from the PCR-MA to the PC.

Command Hierarchy

SCPI commands are ASCII-based commands designed for test and measurement devices. The command hierarchy is structured around the common root or node, which is the construction block of the SCPI subsystem. A command consists of a program header, parameters, and punctuation.

The hierarchy is explained using the SOURce subsystem as an example.

Program header	Parameter	Hierarchy of node
SOUR:		Root node
FREQ		Second level
:LIM		Third level
:UPP	<numeric>	Fourth level
:LOW	<numeric>	Fourth level
VOLT		Second level
:RANGE		Third level
:UPP	<numeric>	Fourth level
:AUTO	<boolean>	Fourth level

A higher node is separated from a lower node using a colon (:).

Command Syntax

This manual denotes SCPI commands using the following format.

```
MEASure[:SCALar]:CURRent:DC? {<numeric>|MINimum|MAXimum}
```

SCPI commands can be issued using the short form. The short form of a SCPI command is the section of the command written in uppercase.

SCPI commands can be sent in the long form or short form. Since SCPI commands are not case-sensitive, CURR, Curr, and curr are all accepted as the short form of CURRent. In the long form, CURRENT, Current, and current are all acceptable.

- A space is required between the program header section and the parameter section.
- Multiple parameters, when available, are concatenated using commas.
- Commands are concatenated using semicolons (compound command).

```
VOLTage:OFFSet:MODE STEP;TRIGgered 48
```

In the second command, VOLTage:OFFSet is omitted. This is because the path is set to VOLTage:OFFSet by the first command VOLTage:OFFSet:MODE.

This compound command is the same as entering the following commands.

```
VOLTage:OFFSet:MODE STEP
VOLTage:OFFSet:TRIGgered 48
```

An error occurs if a node that is not defined in the current path is designated.

Commands of different subsystems can be concatenated using a colon and a semicolon together.

```
SOURce:CURRent MINimum;:MEASure:CURRent:AC?
```

This compound command contains two root nodes, SOUTce and MEASure.

When the second or subsequent command starts with a colon, the path specified by the previous command is cleared.

- The maximum number of characters that can be transmitted in a single line is 128.

■ Special symbols

Special symbols used in this manual to describe SCPI commands are defined below.

- Characters and numbers delimited by "|" in braces indicate that one of the items is to be selected.
  Do not include the braces in the actual program.
- The characters <> indicate program data.
  Do not write <> in the actual program.
- Brackets indicate option data.
  When option data is not sent with the program, the default value is applied.
  Do not write [ ] in the actual program.

■ Queries

The device settings or status can be queried.

To make a query, add a question mark at the end of the program header section.

If a query has parameters, enter a space after the question mark followed by the parameters.

```
CURRent? MIN
```

Response

A response returned as an answer to a query. It is a message that is always sent from the device to the PC. The status of the device or measured values are transmitted to the PC.

- Note -
When transmitting two queries in separate lines, read the response to the first query before transmitting the second line.

■ Program terminator

All commands must be terminated using a valid terminator.

The available terminators (reception and transmission) is LF (line feed, ASCII 0x0A). Either one can be used as a terminator.

When a command string is terminated, the path is reset to the root level.

- Note -
CR (ASCII 0x0D) is not a terminator.

■ Common commands

The IEEE-488.2 and SCPI standards contain a set of common commands for reset, self-test, and other functions. These common commands always start with an asterisk. The commands may have one or multiple parameters.

Parameters

The parameter format of SCPI is derived from the program parameter format defined in IEEE 488.2.

The representation system of the program data that is used on the PCR-MA is indicated below.

■ Non-numeric parameters

Character string data (String)

Used when a series of ASCII characters are requested.

Be sure to enclose a string in single or double quotation marks. The start and end quotation marks must match.

```
DISPlay:AMMeter "AVG"
```

If you wish to use a quotation mark as a part of the string, enter two quotation marks consecutively (with no characters in between).

Character data

Character data is used when only a limited number of values are available for the program setting. Responses are returned in the short form.

```
TRIGger:SOURce {BUS|IMMediate}
```

Boolean data

Boolean data expresses a 1 or 0 condition or an ON or OFF condition. Responses are returned as 1 or 0

```
OUTPut {ON|OFF|1|0}
```

■ Numeric parameters

NR1

Represents an integer.

Details are given in the IEEE 488.2 Standard Digital Interface for Programmable Instrumentation.

If a 0 is returned in the response data, it is returned as +0.

NR2

Represents a real number (floating point).

Details are given in the IEEE 488.2 Standard Digital Interface for Programmable Instrumentation.

NR3

Represents a real number (exponential).

Details are given in the IEEE 488.2 Standard Digital Interface for Programmable Instrumentation.

The value +3.80000E+02 is returned for the response data 380. The number of digits to the right of the decimal is 5.

NRf

NRf is a generic term that includes NR1, NR2, and NR3.

Numeric

A numeric parameter such as a decimal point, optional prefix, or measurement unit.

The syntax as a numeric representation is the same as NRf.

MINimum and MAXimum are available as substitutes for declaring certain values.

Units such as V, A, and W can also be used in a numeric parameter.

■ Special form numeric parameters

The special form numeric parameters MINimum and MAXimum can be used as substitutes for limit values when the parameter is numeric. In the example below, the current limit is set to the minimum value.

```
SOURce:CURRent MINimum
```

Queries can be used to inquire the minimum and maximum values for most parameters.

```
SOURce:CURRent? MAX
SOURce:CURRent? MIN
```

■ Measurement units

The default measurement units are listed below. Commands are accepted even if measurement units are not specified.

•V (voltage) •A (current) •W (wattage) •VA (apparent power)
•VAR (reactive power) •DEG (degree) •HZ (frequency)

The following optional prefixes are supported. If you use optional prefixes, specify the measurement unit.

•M (milli) •K (kilo) •U (micro)

- Note -
- The unit symbols in the International System of Units contain lowercase characters. The IEEE standard uses uppercase characters. SCPI commands are not case sensitive.
- Commands are accepted whether or not measurement units are specified.
- To enter “μ” in the data, use “U” instead.

IEEE488.2 Common Commands

*CLS

Clears all event registers including the status byte, event status, and error queue.

Clears the operation complete standby that was created by the *OPC or *OPC? command.

Command

```
*CLS
```

*ESE

Sets the event status enable register that is counted by the event summary bit (ESB) of the status byte.

Command

```
*ESE <NRf>
*ESE?
```

Parameter
Value: 0 to 255

Response: NR1

(Example) When *ESE 16 is transmitted, bit 4 of the event status enable register is set. Each time the execution error bit (bit 4) of the event status register is set, the summary bit (ESB) of the status byte is set.

*ESR

Queries the event status register.

Registers that are read are cleared.

Command

```
*ESR?
```

Response: NR1

*IDN

Queries the model name, serial number, and firmware version of the PCR-MA.

Command

```
*IDN?
```

Response

The response to *IDN? is indicated below.
(Example) For a PCR1000MA with serial number AB123456 and firmware version VER1.00, this returns:

```
KIKUSUI,PCR1000MA,AB123456,1.00
```

*LRN

Queries the command that can restore the current panel settings.

Command

```
*LRN?
```

Response

Returns the command for reproducing the panel settings as an ASCII character string (500 bytes max.). Commands are separated by a semicolon (;).

*OPC

Sets the OPC bit (bit 0) of the event status register when all the commands in stand-by have been completed.

See section 12.5.3 in IEEE 488.2-1992.

Command

```
*OPC
*OPC?
```

Response

Returns 1 when all the commands in standby have been completed.

*OPT

Queries the optional interface board that are installed in the PCR-MA.

Command

```
*OPT?
```

Response

Returns the optional interface board that is installed in the PCR-MA in comma-separated string format. Returns 0 if there is no option installed.

"IB22"	IB22 GPIB interface board
"EX08"	EX08-PCR-MA External signal interface board

*PSC

Sets whether to clear the event status enable register and the service request enable register when the POWER switch is turned on (power-on status).

Command

```
*PSC <boolean>
*PSC?
```

Parameter

Value:	ON(1)	The *ESE and *SRE settings are cleared when the POWER switch is turned on.
	OFF(0)	The *ESE and *SRE settings are not cleared when the POWER switch is turned on.

(Example)

```
*PSC 0
```

Response: NR1

*RCL

Reads the contents stored in memory.

Clears alarms.

Aborts the trigger subsystem operation.

Command

```
*RCL <NRf>
```

Parameter

Value:	0	Memory A
	1	Memory B
	2	Memory C
	3 to 10	Memory No.

(Example)

```
*RCL 1
```

*RST

Resets a portion of the product settings.

Clears alarms.

Aborts the trigger subsystem operation.

Clears the OPC bit (bit 0) of the status event register.

Setting Items	When *RST performed
OUTPut	OFF
OUTPut:COUPling	AC
[SOURce:]CURRent	MAXimum
[SOURce:]CURRent:OFFSet	MAXimum
[SOURce:]CURRent:PROTection:STATe	1
[SOURce:]FREQuency	60.0[Hz]
[SOURce:]FREQuency:LIMit:LOWer	40
[SOURce:]FREQuency:LIMit:UPPer	500
[SOURce:]FREQuency:MODE	FIXed
[SOURce:]FREQuency:TRIGgered	60.0[Hz]
[SOURce:]VOLTage	0.0[V]
[SOURce:]VOLTage:LIMit:LOWer	0
[SOURce:]VOLTage:LIMit:UPPer	315.0
[SOURce:]VOLTage:MODE	FIXed
[SOURce:]VOLTage:TRIGgered	0.0[V]
[SOURce:]VOLTage:OFFSet	0.0[V]
[SOURce:]VOLTage:OFFSet:LIMit:LOWer	0
[SOURce:]VOLTage:OFFSet:LIMit:UPPer	445.0
[SOURce:]VOLTage:OFFSet:MODE	FIXed
[SOURce:]VOLTage:OFFSet:TRIGgered	0.0[V]
[SOURce:]VOLTage:RANGe	155
[SOURce:]VOLTage:RANGe:AUTO	OFF
INITiate:CONTinuous:ACQuire	OFF
TRIGger :TRANsient:SOURce	BUS
TRIGger :SYNChronize:SOURce	IMMediate
TRIGger :SYNChronize:PHASe:ON	0[deg]
TRIGger :ACQuire:SOURce	BUS
DISPlay:AMMeter	RMS
SENSe:AVERage	1
SENSe:VOLTage:EQUalizer	OFF

Command

```
*RST
```

*SAV

Stores the current panel settings to memory

Command

```
*SAV <NR1>
```

Parameter

Value:	0	Memory A
	1	Memory B
	2	Memory C
	3 to 10	Memory No.

(Example)

```
*SAV 1
```

*SRE

Sets the service request enable register.

The service request enable register is used to select the summary messages in the status byte register that will be able to perform service requests.

To clear the service request enable register, send *SRE 0. If the register is cleared, service requests cannot be generated by status information.

Command

```
*SRE <NRf>
*SRE?
```

Parameter

Value: 0 to 255

(Example)

Sending *SRE 8 sets bit 3 of the service request enable register. Each time the summary bit (bit 3) of the QUEStionable status register in the status byte is set, a service request message is generated.

Response: NR1

*STB

Queries the contents of the status byte register and the MSS (master summary status) message.

The response is the same as serial polling only with the exception that the MSS message appears in place of the RQS message in bit 6.

Command

```
*STB?
```

Response: NR1

*TRG

Trigger command.

Executes triggers on the TRANsient trigger group and ACQuire trigger group.

This is a substitute command for the IEEE488.1 get (Group Execute Trigger) command.

If the PCR-MA is not in a condition to accept triggers, an SCPI error (-211,"Trigger ignored") occurs.

See section 10.37 in IEEE 488.2-1992.

Command

```
*TRG
```

*TST

Executes a self-test.

Use SYST:ERR? to query the errors that occurred. See section 10.38 in IEEE 488.2-1992.

Command

```
*TST?
```

Response

Returns 0 if there are no errors. Returns the error code, if there are errors.

*WAI

Prevents the PCR-MA from executing subsequent commands until all operations in standby are complete.

Command

```
*WAI
```

ABORt Command

PCR-MA has two different trigger subsystems -TRANsient, and ACQuire.

The TRANsient subsystem is a trigger subsystem that changes the settings.

The ACQuire subsystem is the measurement trigger subsystem. This subsystem is used to measure values such as voltage, current, and power.

ABOR

Aborts operations such as change and measurement in all trigger subsystem (TRAN-Sient/ ACQuire).

The trigger status immediately after the power is turned on is the same as the trigger status when the ABOR command is received.

If the ABOR command is sent when the measurement is already started, the measured data remains invalid.

If the ABOR command is sent when the ACQuire subsystem is not initiated and the measured data that is held is valid, the measured data is not discarded.

A specific trigger subsystem cannot be specified with the ABOR command. It is always interpreted as ALL.

Command

```
ABORt[:ALL]
```

ABOR:ACQ

Aborts operations such as execute in ACQuire trigger subsystem.

If the ABOR:ACQ command is sent when the measurement is already started, the measured data remains invalid.

If the ABOR:ACQ command is sent when the ACQuire subsystem is not initiated and the measured data that is held is valid, the measured data is not discarded.

Command

```
ABORt:ACQuire
```

ABOR:TRAN

Aborts the setting change trigger function.

Command

```
ABORt:TRANsient
```

DISPlay Command

DISP:AMM

Sets the measured value displayed on the lower numeric display.

Command

```
DISPlay:AMMeter <character>
DISPlay:AMMeter?
```

Parameter

Value:	RMS	Current (default)
	AVG	Moving average of the current
	PEAK	Peak current
	WATTage	Wattage

Settings are reset to default when the *RST command is sent.

(Example)

```
DISP:AMM WATT
```

Response: character

INITiate Command

INIT:ACQ

Clears the present valid measurement data and starts a new measurement.

If the trigger source parameter is IMM, the measurement starts immediately. If set to BUS, the measurement starts after waiting for a software trigger.

Command

```
INITiate[:IMMediate]:ACQuire
```

Related Command

```
INIT:CONT:ACQ
TRIG:ACQ
TRIG:ACQ:SOUR
```

INIT:CONT:ACQ

Sets the auto continue mode of the ACQuire subsystem.

When the auto continue mode is turned on

If the trigger source parameter is set to IMM, the measurement starts immediately. When the operation is complete, a new measurement automatically starts.
If the parameter is set to BUS, the measurement starts after receiving a software trigger. When the operation is complete, the PCR-MA waits for the next trigger.

When the auto continue mode is turned off

The measurement currently in progress continues unless ABOR is sent. The operation does not automatically continue to the new measurement.

Command

```
INITiate:CONTinuous:ACQuire <boolean>
```

```
INITiate:CONTinuous:ACQuire?
```

Parameter

Value:	ON(1)	Auto continue mode on
	OFF(0)	Auto continue mode off (default)

(Example)

```
INIT:CONT:ACQ ON
```

Response: NR1

Related Command

```
INIT:ACQ
```

```
TRIG:ACQ
```

```
TRIG:ACQ:SOUR
```

INIT:TRAN

Starts the setting change (TRANsient) trigger function.

If trigger source is set to IMM, the change starts immediately. If set to BUS, the change starts after waiting for a software trigger.

Command

```
INITiate[:IMMediate]:TRANsient
```

Related Command

```
TRIG:TRAN
```

```
TRIG:TRAN:SOUR
```

LXI Command

LXI:IDEN

Turns the identify display on or off.

When turned on, the LAN LED on the front panel of the PCR-MA series that is being controlled through the LAN interface blinks so that you can identify it.

Command

```
LXI:IDENtify [:STATe] <boolean>
```

```
LXI:IDENtify [:STATe]?
```

Parameter

Value:	ON(1)	Identify display on
	OFF(0)	Identify display off (default)

(Example)

```
LXI:IDEN ON
```

Response: NR1

MEASure/FETCh Command

The measurement function is mapped to the ACQuire trigger subsystem.

If you use the root node MEASure, the measurement is performed, and then the measured value is queried. If you use FETC, the measured value is queried without a measurement being performed.

<meas-item> is the last node of the command header.

-> Tutorial “Measurement (ACQuire)”

FETC:<meas-item>/ MEAS:<meas-item>

Queries the scalar measurement data specified with <meas-item>.

Command

```
FETCh[:SCALar]:<meas-item>?
MEASure[:SCALar]:<meas-item>?
```

<meas-item> list

<meas-item>	Description	Unit
ALL	All (the 18 items below)	
CURRent[:DC]	DC current	A
CURRent:AC	AC current	Arms
CURRent:ACDC	AC+DC current	Arms
CURRent:AMPLitude:MAXimum[:INSTant]	Current peak value	A
CURRent:AMPLitude:MAXimum:HOLD	Hold value of peak current	A
CURRent:CRESTfactor	Current crest factor	--
POWer[:DC]	DC power	W
POWer:AC[:REAL]	AC power	W
POWer:AC:APParent	AC power (apparent power)	VA
POWer:AC:REACtive	AC power (reactive power)	VAR
POWer:AC:PFACtor	Power factor of the AC power	--
POWer:ACDC[:REAL]	AC+DC power	W
POWer:ACDC:APParent	AC+DC power (apparent power)	VA
POWer:ACDC:REACtive	AC+DC power (reactive power)	VAR
POWer:ACDC:PFACtor	Power factor of the AC+DC power	--
VOLTage[:DC]	DC voltage	V
VOLTage:AC	AC voltage	Vrms
VOLTage:ACDC	AC+DC voltage	Vrms

Response

Returns the measured value in NR3 format in response to FETC:<meas-item>?/ MEAS:<meas-item>?.
Returns the measured values in the <measitem> list order in comma-separated NR3 format in response to FETC:ALL?/MEAS:ALL?.

OUTPut Command

OUTP

Turns the output on and off.

Command

```
OUTPut[:STATe] <boolean>
OUTPut[:STATe]?
```

Parameter

Value:	ON(1)	Output on
	OFF(0)	Output off (default)

Settings are reset to default when the *RST command is sent.

(Example)

```
OUTP 1
```

Response: NR1

OUTP:COUP

Sets the output mode.

This command is not valid when the output is on (OUTP ON).

Command

```
OUTPut:COUPling <character>
OUTPut:COUPling?
```

Parameter

Value:	AC	AC mode (default)
	DC	DC mode
	ACDC	AC+DC mode
	EAC	EXT-AC (when the analog interface board is installed only)
	EDC	EXT-DC (when the analog interface board is installed only)

(Example)

```
OUTP:COUP DC
```

Response: character

OUTP:PON:STAT

Sets the panel settings at power-on.

Command

```
OUTPut:PON:STATe <character>
OUTPut:PON:STATe?
```

Parameter

Value:	RST	Reset the panel settings
	RCL0	Settings stored in memory 0
	AUTO	The previous state before the POWER switch was turned off (default) The output is set to off.

(Example)

```
OUTP:PON:STAT RCL0
```

Response: character

OUTP:PROT:CLE

Clears alarms.

Command

```
OUTPut:PROTection:CLEar
```

SENSe Command

SENS:AVER

Sets the averaging period of the measured values (excluding the peak current).

Command

```
SENSe:AVERage <NRf>
SENSe:AVERage?
```

Parameter

Value: 1, 2, 4, 8, 16 (1 by default)

Settings are reset to default when the *RST command is sent.

(Example)

```
SENSe:AVER 16
```

Response: NR1

SENS:CURR:HOLD

Sets the hold time of the peak current.

Command

```
SENSe:CURRent[:PEAK]:HOLD <character>
SENSe:CURRent[:PEAK]:HOLD?
```

Parameter

Value:	SHORt	Update every approximately 0.3 seconds (default)
	LONG	Hold the peak value for approximately 5 seconds

Settings are reset to default when the *RST command is sent.

(Example)

```
SENS:CURR:HOLD LONG
```

Response: character

SENS:CURR:HOLD:CLE

Clears the peak hold of the current measurement

Command

```
SENSe:CURRent[:PEAK]:HOLD:CLEar
```

[SOURce:]CURRent Command

CURR

Sets the AC current upper limit.

This command is valid in AC mode, AC+DC mode, or EXT-AC mode (OUTP:COUP AC|ACDC|EXTAC).

Command

```
[SOURce:]CURRent[:LEVel][:IMMediate][:AMPLitude] <numeric>
[SOURce:]CURRent[:LEVel][:IMMediate][:AMPLitude]?
```

Parameter

Value:	PCR500MA	0.1 to 5.25 (5.25 by default)
	PCR1000MA	0.2 to 10.5 (10.5 by default)
	PCR2000MA	0.4 to 21.0 (21.0 by default)
	PCR4000MA	0.8 to 42.0 (42.0 by default)
Unit:	A	

Settings are reset to default when the *RST command is sent.

(Example)

```
CURR 2.5
```

Response: NR3

CURR:OFFS

Sets the DC current upper limit.

This command is valid in DC mode, AC+DC mode, or EXT-DC mode (OUTP:COUP DC|ACDC|EXTDC).

Command

```
[SOURce:]CURRent:OFFSet[:IMMediate] <numeric>
[SOURce:]CURRent:OFFSet[:IMMediate]?
```

Parameter

Value:	PCR500MA	0.1 to 4.2 (4.2 by default)
	PCR1000MA	0.2 to 8.4 (8.4 by default)
	PCR2000MA	0.4 to 16.8 (16.8 by default)
	PCR4000MA	0.8 to 33.6 (33.6 by default)
Unit:	A	

Settings are reset to default when the *RST command is sent.

(Example)

```
CURR:OFFS 3.5
```

Response: NR3

CURR:PROT:STAT

Sets the PCR-MA acts when the current limit is exceeded.

Command

```
[SOURce:]CURRent:PROTection:STATe <boolean>
[SOURce:]CURRent:PROTection:STATe?
```

Parameter

Value: ON(1) TRIP (when an overload occurs for longer than 3 s, the output is turned off, and an alarm is generated; default).

OFF(0) CC (when an overload occurs, the output is lowered so that the current limit is not exceeded).

Settings are reset to default when the *RST command is sent.

(Example)

```
CURR:PROT:STAT 1
```

Response: NR1

[SOURce:]FREQuency Command

FREQ

Set the AC output frequency.

The upper limit and lower limit of frequency can also be set at the same time.

This command is valid in AC mode, AC+DC mode, EXT-AC mode or EXT-DC mode (OUTP:COUP AC|ACDC|EXTAC|EXTDC).

Command

```
[SOURce:]FREQuency[:CW|IMMediate] <freq_numeric>[,<lim_lower_numeric>,<lim_upper_numeric>]
[SOURce:]FREQuency[:CW|IMMediate]?
```

Parameter <freq_numerc> Frequency

Value: 40.0 to 500.0 (60 by default)

Parameter <lim_lower_numerc> Lower limit value of frequency

Value: 40.0 to 500.0 (40 by default)

Parameter <lim_upper_numerc> Upper limit value of frequency

Value: 40.0 to 500.0 (500 by default)

Unit: Hz (all parameters)

Settings are reset to default when the *RST command is sent.

(Example)

```
FREQ 400
FREQ 60,55,65
```

Response: NR3

FREQ:LIM:LOW

Sets the lower limit value of frequency.

This command is valid in AC mode, AC+DC mode, EXT-AC mode or EXT-DC mode (OUTP:COUP AC|ACDC|EXTAC|EXTDC).

Command

```
[SOURce:]FREQuency:LIMit:LOWer <numeric>
```

```
[SOURce:]FREQuency:LIMit:LOWer?
```

Parameter

Value: 40.0 to 500.0 Frequency (40 by default)
Unit: Hz

Settings are reset to default when the *RST command is sent.

(Example)

```
FREQ:LIM:LOW 55
```

Response: NR3

FREQ:LIM:UPP

Sets the upper limit value of frequency.

This command is valid in AC mode, AC+DC mode, EXT-AC mode or EXT-DC mode (OUTP:COUP AC|ACDC|EXTAC|EXTDC).

Command

```
[SOURce:]FREQuency:LIMit:UPPer <numeric>
```

```
[SOURce:]FREQuency:LIMit:UPPer?
```

Parameter

Value: 40.0 to 500.0 Frequency (500 by default)
Unit: Hz

Settings are reset to default when the *RST command is sent.

(Example)

```
FREQ:LIM:UPP 65
```

Response: NR3

FREQ:MODE

Sets the trigger function control of the frequency setting when INIT/INIT:TRAN and a software trigger are sent.

Command

```
[SOURce:]FREQuency:MODE <character>
```

```
[SOURce:]FREQuency:MODE?
```

Parameter

Value:	FIXed	Disables the trigger function (default)
	STEP	Enables the trigger function

Settings are reset to default when the *RST command is sent.

(Example)

```
FREQ:MODE STEP
```

Response: character

FREQ:TRIG

Sets the target frequency when INIT/INIT:TRAN and a software trigger are sent.

This command is valid in AC mode, AC+DC mode, EXT-AC mode or EXT-DC mode (OUTP:COUP AC|ACDC|EXTAC|EXTDC).

Command

```
[SOURce:]FREQuency:TRIGgered <numeric>
```

```
[SOURce:]FREQuency:TRIGgered?
```

Parameter

Value:	40.0 to 500.0	Frequency (60 by default)
Unit:	Hz	

Settings are reset to default when the *RST command is sent.

When you send the FREQ command, this setting is set to the FREQ value.

(Example)

```
FREQ:TRIG 400
```

Response: NR3

[SOURce:]VOLTage Command

VOLT

Sets the AC voltage.

The upper limit and lower limit of AC voltage can also be set at the same time.

This command is valid in AC mode or AC+DC mode (OUTP:COUP AC|ACDC).

Command

```
[SOURce:]VOLTage[:LEVel][:IMMediate][:AMPLitude] <volt_numeric>[,<lim_lower_numeric>,<lim_upper_numeric>]
[SOURce:]VOLTage[:LEVel][:IMMediate][:AMPLitude]?
```

Parameter <volt_numeric> AC voltage (0 by default)

Value:	AC mode, 155V range	0 to 157.5
	AC mode, 310V range	0 to 315.0
	AC+DC mode, 155V range	-222.5 V to 222.5 V*1
	AC+DC mode, 310V range	-445 V to 445 V*1

*1. This can only be set when the AC and DC voltages are within the settable ranges defined by the voltage limits and the AC+DC waveform peak is within the settable range.

Parameter <lim_lower_numeric> Lower limit value of AC value

Value:	155V range	0 to 157.5 (0 by default)
	310V range	0 to 315.0 (0 by default)

Parameter <lim_upper_numeric> Upper limit value of AC value

Value: 0 to 315.0 (315 by default)

Unit: V (all parameters)

Settings are reset to default when the *RST command is sent.

(Example)

```
VOLT 120
VOLT 100,90,110
```

Response: NR3

VOLT:LIM:LOW

Sets the lower limit value of AC voltage.

This command is valid in AC mode and AC+DC mode (OUTP:COUP AC|ACDC).

Command

```
[SOURce:]VOLTage[:LEVel]:LIMit:LOWer <numeric>
[SOURce:]VOLTage[:LEVel]:LIMit:LOWer?
```

Parameter

Value:	155V range	0 to 157.5 (0 by default)
	310V range	0 to 315.0 (0 by default)
Unit:	V	

Settings are reset to default when the *RST command is sent.

(Example)

```
VOLT:LIM:LOW 90
```

Response: NR3

VOLT:LIM:UPP

Sets the upper limit value of AC voltage.

This command is valid in AC mode and AC+DC mode (OUTP:COUP AC|ACDC).

Command

```
[SOURce:]VOLTage[:LEVel]:LIMit:UPPer <numeric>
```

```
[SOURce:]VOLTage[:LEVel]:LIMit:UPPer?
```

Parameter

Value: 0 to 315.0 (315.0 by default)
Unit: V

Settings are reset to default when the *RST command is sent.

(Example)

```
VOLT:LIM:UPP 110
```

Response: NR3

VOLT:MODE

Sets the trigger function control of the AC voltage setting when INIT/INIT:TRAN and a software trigger are sent.

Command

```
[SOURce:]VOLTage[:LEVel]:MODE <character>
```

```
[SOURce:]VOLTage[:LEVel]:MODE?
```

Parameter

Value:	FIXed	Disables the trigger function (default)
	STEP	Enables the trigger function

Settings are reset to default when the *RST command is sent.

(Example)

```
VOLT:MODE STEP
```

Response: character

VOLT:OFFS

Sets the DC voltage.

The upper limit and lower limit of DC voltage can also be set at the same time.

This command is valid in DC mode or AC+DC mode (OUTP:COUP DC|ACDC).

Command

```
[SOURce:]VOLTage:OFFSet[:IMMediate] <volt_numeric>[,<lim_lower_numeric>,<lim_upper_numeric>]
[SOURce:]VOLTage:OFFSet[:IMMediate]?
```

Parameter <volt_numeric> DC voltage (0 by default)

Value:	DC mode, 155V range	-222.5 to 222.5
	DC mode, 310V range	-445.0 to 445.0
	AC+DC mode, 155V range	-222.5 to 222.5*1
	AC+DC mode, 310V range	-445.0 to 445.0*1

*1. This can only be set when the AC and DC voltages are within the settable ranges defined by the voltage limits and the AC+DC waveform peak is within the settable range.

Parameter <lim_lower_numeric> Lower limit value of DC value

Value:	155V range	-445.0 to 222.5 (0 by default)
	310V range	-445.0 to 445.0 (0 by default)

Parameter <lim_upper_numeric> Upper limit value of AC value

Value:	155V range	-222.5 to 445.0 (0 by default)
	310V range	-445.0 to 445.0 (0 by default)

Unit: V (all parameters)

Settings are reset to default when the *RST command is sent.

(Example)

```
VOLT:OFFS -10.5
VOLT:OFFS 48.0, 45.0, 51.0
```

Response: NR3

VOLT:OFFS:LIM:LOW

Sets the lower limit value of DC voltage.

This command is valid in DC mode and AC+DC mode (OUTP:COUP DC|ACDC).

Command

```
[SOURce:]VOLTage:OFFSet:LIMit:LOWer <numeric>
[SOURce:]VOLTage:OFFSet:LIMit:LOWer?
```

Parameter

Value:	155V range	-445.0 to 222.5 (0 by default)
	310V range	-445.0 to 445.0 (0 by default)
Unit:	V	

Settings are reset to default when the *RST command is sent.

(Example)

```
VOLT:OFFS:LIM:LOW 170
```

Response: NR3

VOLT:OFFS:LIM:UPP

Sets the upper limit value of DC voltage.

This command is valid in DC mode and AC+DC mode (OUTP:COUP DC|ACDC).

Command

```
[SOURce:]VOLTage:OFFSet:LIMit:UPPer <numeric>
```

```
[SOURce:]VOLTage:OFFSet:LIMit:UPPer?
```

Parameter

Value:	155V range	-222.5 to 445.0 (445.0 by default)
	310V range	-445.0 to 445.0 (445.0 by default)
Unit:	V	

Settings are reset to default when the *RST command is sent.

(Example)

```
VOLT:OFFS:LIM:UPP 190
```

Response: NR3

VOLT:OFFS:MODE

Sets the trigger function control of the DC voltage setting when INIT/INIT:TRAN and a software trigger are sent.

Command

```
[SOURce:]VOLTage:OFFSet:MODE <character>
```

```
[SOURce:]VOLTage:OFFSet:MODE?
```

Parameter

Value:	FIXed	Disables the trigger function (default)
	STEP	Enables the trigger function

Settings are reset to default when the *RST command is sent.

(Example)

```
VOLT:OFFS:MODE STEP
```

Response: character

VOLT:OFFS:TRIG

Sets the target DC voltage when INIT/INIT:TRAN and a software trigger are sent.

This command is valid in DC mode and AC+DC mode (OUTP:COUP DC|ACDC).

Command

```
[SOURce:]VOLTage:OFFSet:TRIGgered <numeric>
```

```
[SOURce:]VOLTage:OFFSet:TRIGgered?
```

Parameter (0 by default)

Value:	DC mode, 155V range	-222.5 to 222.5
	DC mode, 310V range	-445.0 to 445.0
	AC+DC mode, 155V range	-222.5 to 222.5*1
	AC+DC mode, 310V range	-445.0 to 445.0*1
Unit:	V	

*1. This can only be set when the AC and DC voltages are within the settable ranges defined by the voltage limits and the AC+DC waveform peak is within the settable range.

Settings are reset to default when the *RST command is sent.

When you send the VOLT:OFFS command, this setting is set to the VOLT:OFFS value.

(Example)

```
VOLT:OFFS:TRIG -10.5
```

Response: NR3

VOLT:RANG

Sets the voltage range.

If the voltage range is switched, the VOLT:TRIG and VOLT:OFFS:TRIG settings are cleared, and ABOR is applied to all trigger subsystem.

This command is not valid when the output is on (OUTP ON).

Command

```
[SOURce:]VOLTage:RANGe[:UPPer] <numeric>
```

```
[SOURce:]VOLTage:RANGe[:UPPer]?
```

Parameter

Value	155	155V range (default)
	310	310V range

Settings are reset to default when the *RST command is sent.

(Example)

```
VOLT:RANG 310
```

Response: NR3

VOLT:RANG:AUTO

Sets AUTO function of the voltage range.

If the AUTO function is switched, the VOLT:TRIG and VOLT:OFFS:TRIG settings are cleared, and ABOR is applied to all SEQuence groups.

Command

```
[SOURce:]VOLTage:RANGe:AUTO <boolean>
```

```
[SOURce:]VOLTage:RANGe:AUTO?
```

Parameter

Value:	ON(1)	Enable the AUTO function
	OFF(0)	Disable the AUTO function (default)

Settings are reset to default when the *RST command is sent.

(Example)

```
VOLT:RANG:AUTO ON
```

Response: NR1

VOLT:TRIG

Sets the target AC voltage when INIT/INIT:TRAN and a software trigger are sent.

This command is valid in AC mode and AC+DC mode (OUTP:COUP AC|ACDC).

Command

```
[SOURce:]VOLTage[:LEVel]:TRIGgered[:AMPLitude] <numeric>
```

```
[SOURce:]VOLTage[:LEVel]:TRIGgered[:AMPLitude]?
```

Parameter (0 by default)

Value:	AC mode, 155V range	0 to 157.5
	AC mode, 310V range	0 to 315.0
	AC+DC mode, 155V range	-222.5 V to 222.5 V[*1]
	AC+DC mode, 310V range	-445 V to 445 V[*1]

*1. This can only be set when the AC and DC voltages are within the settable ranges defined by the voltage limits and the AC+DC waveform peak is within the settable range.

Settings are reset to default when the *RST command is sent.

When you send the VOLT command, this setting is set to the VOLT value.

(Example)

```
VOLT:TRIG 120
```

Response: NR3

STATus Command

Register Structure

The character "+" represents the logical sum of the register bits.

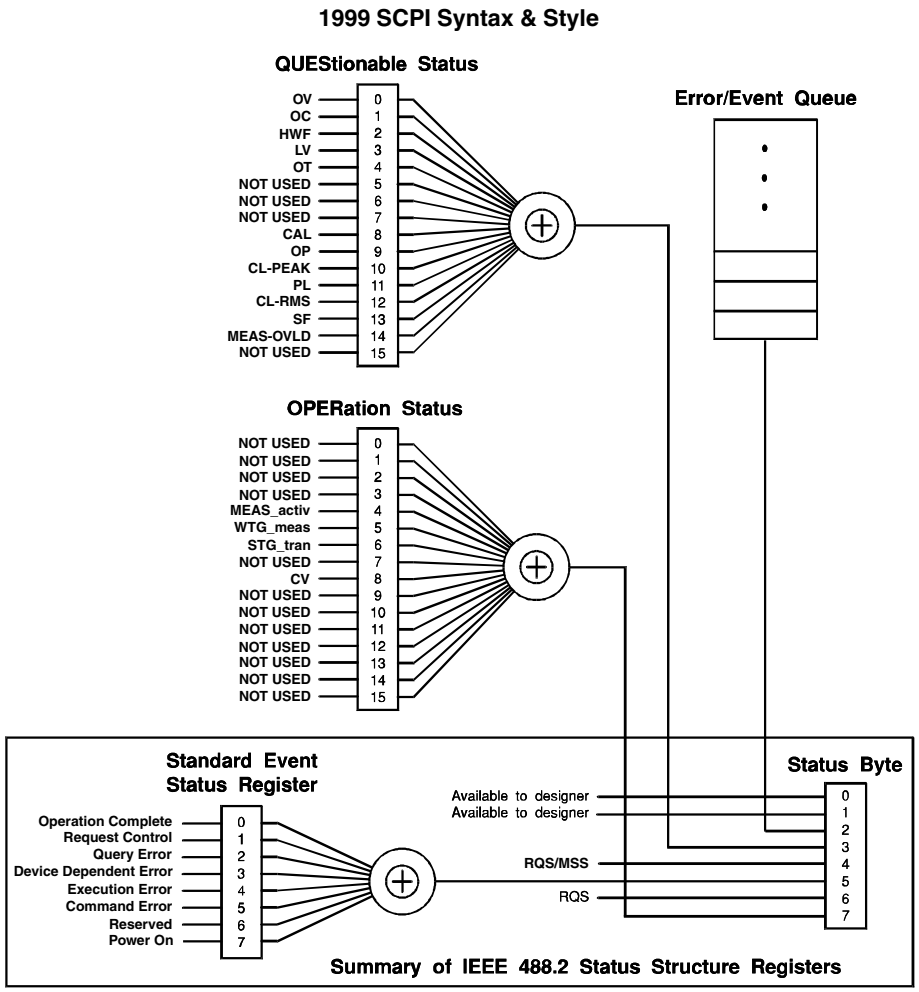

Architecture

IEEE488.2 and SCPI registers are used for the status reports.

In each SCPI status register, there are the following sub registers: CONDition register, EVENt register, ENABle register, PTRansition filter, and NTRansition filter.

CONDition register

The transition of the CONDition register is automatic and reflects the condition of the PCR-MA in real-time. Reading this register does not affect the contents.

EVENt register

The EVENt register bits are automatically set according to the changes in the CONDition register. The rule varies depending on the positive and negative transition filters (PTRansition and NTRansition). The EVENt register is reset when it is read.

ENABle register

The ENABle register enables the reports to the summary bit or status bit of the event bit.

Transition filter

The PTRansition (positive transition) filter is used to report events when the condition changes from false to true.

The NTRansition (negative transition) filter is used to report events when the condition changes from true to false.

If both the positive filter and the negative filter are set to true, events can be reported each time the status changes.

If both filters are cleared, event reporting is disabled.

Status byte register

The status byte register stores STB and RQS (MSS) messages as defined by the IEEE488.1 standard. The status byte register can be read using IEEE488.1 serial polling or the IEEE488.2 common command *STB?.

When serial polling is carried out, bit 6 responds with the request service (RQS). The status byte value is not changed by serial polling.

*STB? makes the device transmit the contents of the status byte register and the master status summary (MSS) message.

*STB? does not change the status byte, MSS, or RQS.

Bit	Bit weight	Bit name	Description
0	1	Reserved	Reserved for future use by the IEEE488. The bit value is notified as zero.
1	2	Reserved	
2	4	Error/Event Queue	If data exists in the error or event queue, this bit is set to true.
3	8	Questionable Status Register (QUES)	This bit is set to true when a bit is set in the QUEStionable event status register and the corresponding bit in the QUEStionable status enable register is true.
4	16	Message Available (MAV)	This bit is set to true when a request is received from the digital programming interface and the PCR-MA is ready to output the data byte.
5	32	Standard Event Status Bit Summary (ESB)	This bit is set to true when a bit is set in the event status register.
6	64	Request Service (RQS)	This bit is set to true when a bit is set in the service request enable register, and the corresponding bit exists in the status byte. The SRQ line of the GPIB is set.
		Master Status Summary (MSS)	This bit is set to true when a bit in the status byte register is set to 1 and the corresponding bit in the service request enable register is set to 1.
7	128	Operation Status Register (OPER)	This bit is set to true when a bit is set in the OPERation event status register and the corresponding bit in the OPERation status enable register is set.
8-15		Not Used	--

Event status register

The event status register bits are set when certain events occur during PCR-MA operation. All bits of the event status register are set by the error event queue.

The register is defined by the IEEE488.2 standard and is controlled by the IEEE488.2 common commands *ESE, *ESE?, and *ESR?.

See SYST:ERR? for the descriptions of the errors.

Bit	Bit weight	Bit name	Description	Error code
0	1	Operation Complete(OPC)	Set when an *OPC command is received and all operations in standby are complete.	-800 to -899
1	2	Request Control (RQC)	Not used	--
2	4	Query Error(QYE)	Set when an attempt is made to read data from the output queue when there is no output or the error queue is in wait status. Indicates that there is no data in the error queue.	-400 to -499
3	8	Device Dependent Error(DDE)	Set when there is a device-specific error.	-300 to -399 100 to 999
4	16	Execution Error(EXE)	Set when the PCR-MA evaluates that the program data following the header is outside the formal input range or does not match the performance of the PCR-MA. This indicates that a valid SCPI command may not be executed correctly depending on the conditions of the PCR-MA.	-200 to -299
5	32	Command Error(CME)	ISet when an IEEE 488.2 syntax error is detected, when an unidentifiable header is received, or when a group execution trigger enters the internal IEEE 488.2 SCPI command input buffer.	-100 to -199
6	64	User Request(URQ)	Not used	--
7	128	Power On(PON)	Set when the power is turned on.	--
8-15		Reserved	Not used	--

OPERation status register

The OPERation status register is a 16-bit register that contains conditions that are part of the PCR-MA normal operations.

Bit	Bit weight	Bit name	Description
0	1	NOT USED	--
1	2	NOT USED	--
2	4	NOT USED	--
3	8	NOT USED	--
4	16	MEAS_activ	Indicates whether measurement is in progress on the PCR.-MA
5	32	WTG_meas	Indicates whether the PCR-MA is waiting for a measurement trigger (*TRG/TRIG:ACQ).
6	64	WTG_tran	Indicates whether the PCR-MA is waiting for a setting change trigger (*TRG/TRIG:TRAN).
7	128	NOT USED	--
8	256	CV	CV output
9	512	NOT USED	--
10	1024	NOT USED	--
11	2048	NOT USED	--
12	4096	NOT USED	--
13	8192	NOT USED	--
14	16384	NOT USED	--
15	32768	NOT USED	Always zero

STAT:OPER

Queries the event of the OPERation status register.

A query clears the contents of the register.

Command

```
STATus:OPERation[:EVENt]?
```

Response: NR1

STAT:OPER:COND

Queries the condition of the OPERation status register.
A query does not clear the contents of the register.

Command

```
STATus:OPERation:CONDition?
```

Response: NR1

STAT:OPER:ENAB

Sets the enable register of the OPERation status register.

Command

```
STATus:OPERation:ENABle <NRf>
STATus:OPERation:ENABle?
```

Parameter
Value: 0 to 65535 (0 by default)

Response: NR1

STAT:OPER:NTR

Sets the negative transition of the OPERation status register.

Command

```
STATus:OPERation:NTRansition <NRf>
STATus:OPERation:NTRansition?
```

Parameter

Value: 0 to 65535 (0 by default)

Response: NR1

STAT:OPER:PTR

Sets the positive transition of the OPERation status register.

Command

```
STATus:OPERation:PTRansition <NRf>
STATus:OPERation:PTRansition?
```

Parameter

Value: 0 to 65535 (0 by default)

Response: NR1

QUEStionable status register

The QUEStionable status register is a 16-bit register that stores information related to the questionable events and status during PCR-MA operation.These register bits may indicate problems with the measured data of the PCR-MA.

Bit	Bit weight	Bit name	Description
0	1	OV (Over Voltage Protection)	Over voltage protection has been activated
1	2	OC (Over Current Protection)	Over current protection has been activated
2	4	HWF (Hardware Failure)	Device error has occurred.
3	8	LV (Low Voltage Protection)	Low voltage protection has been activated
4	16	OT (Over Temperature Protec-tion)	Over temperature protection has been activated
5	32	Not Used	--
6	64	Not Used	--
7	128	Not Used	--
8	256	CAL(CALibration)	Calibration data is invalid
9	512	OP (Over Power protection)	Overpower protection has been activated
10	1024	CL-PEAK (Current Limit on PEAK)	Current limit control has been activated
11	2048	PL(Power Limit)	Overpower overload has been activated
12	4096	CL-RMS(Current Limit on RMS)	Overcurrent (peak) overload has been activated
13	8192	SF(Remote sensing failer)	Sensing error has occurred.
14	16384	MEAS-OVLD(Measurement overload detected)	Overload has been detected.
15	32768	Not Used	Always zero

STAT:QUES

Queries the event of the QUEStionable status register.

A query clears the contents of the register.

Command

```
STATus:QUEStionable[:EVENt]?
```

Response: NR1

STAT:QUES:COND

Queries the condition of the QUEStionable status register.
A query does not clear the contents of the register.

Command

```
STATus:QUEStionable:CONDition?
```

Response: NR1

STAT:QUES:ENAB

Sets the enable register of the QUEStionable status register.

Command

```
STATus:QUEStionable:ENABle <NRf>
STATus:QUEStionable:ENABle?
```

Parameter
Value:0 to 65535 (0 by default)

Response: NR1

STAT:QUES:NTR

Sets the negative transition of the QUEStionable status register.

Command

```
STATus:QUEStionable:NTRansition <NRf>
STATus:QUEStionable:NTRansition?
```

Parameter

Value:0 to 65535 (0 by default)

Response: NR1

STAT:QUES:PTR

Sets the positive transition of the QUEStionable status register.

Command

```
STATus:QUEStionable:PTRansition <NRf>
STATus:QUEStionable:PTRansition?
```

Parameter

Value:0 to 65535 (0 by default)

Response: NR1

Preset status

STAT:PRES

Resets the ENABle, PTRansition, and NTRansition filter registers of all status registers (including sub registers) to their default values

Default values:
STATus:ENABle = 0x0000
STATus:PTRansition = 0x7FFF
STATus:NTRansition = 0x0000

Command

```
STATus:PRESet
```

SYSTem Command

SYST:COMM:GPIB:ADDR

Sets the GPIB address.

Command

```
SYSTem:COMMunicate:GPIB:ADDRess <NR1>
SYSTem:COMMunicate:GPIB:ADDRess?
```

Parameter

Value: 1 to 30

(Example)

```
SYST:COMM:GPIB:ADDR 23
```

Response: NR1

SYST:COMM:LAN:CONT

Queries the TCP port number used by SCPI-RAW.

SYST:COMM:LAN:CONT and SYST:COMM:TCP:CONT are aliases.

Command

```
SYSTem:COMMunicate:LAN:CONTrol?
```

Response

Returns +5025.

SYST:COMM:RLST

Sets the operation of the PCR-MA to local or remote.

Command

```
SYSTem:COMMunicate:RLSTate <character>
SYSTem:COMMunicate:RLSTate?
```

Parameter

Value:	LOCal	Sets the PCR-MA to local mode (Remote Disable; the RMT LED turns off). Disable state enables both panel operations and commands. This is a substitute command for IEEE488.1 ren FALSE (Remote Disable).
	REMote	Sets the PCR-MA operation to remote mode. All panel keys except the LOCAL key are locked. This is a substitute command for the IEEE488.1 REN (Remote Enable) command and address designation.
	RWLock	Sets the PCR-MA operation to remote mode. All panel keys are locked (the LOCAL key is also locked). This is a substitute command for the IEEE488.1 llo (Local Lock Out) command.

(Example)

```
SYST:COMM:RLST REM
```

Response: character

SYST:COMM:TCP:CONT

Queries the TCP port number used by SCPI-RAW.

SYST:COMM:LAN:CONT and SYST:COMM:TCP:CONT are aliases.

Command

```
SYSTem:COMMunicate:TCPip:CONTrol?
```

Response

Returns +5025.

SYST:COMM:USB:ADDR

Queries the address information of the USB interface.

Command

```
SYSTem:COMMunicate:USB:ADDRess?
```

Response

Returns the address information in the following order in a comma-separated format.

VID (vendor ID) <NR1>, vendor name <character>, PID (product ID)<NR1>, product name <character>, serial number <character>

Response example: For a PCR500MA with a serial number AB123456

```
2878,KIKUSUI,4176,PCR500MA,AB123456
```

is returned.

SYST:CONF:TRAC

Sets whether to display communication errors by performing a debug trace.

If the debug trace function is turned on, error codes (example: Err-100) are shown on the PCR-MA display.

Command

```
SYSTem:CONFigure:TRACe <boolean>
```

```
SYSTem:CONFigure:TRACe?
```

Parameter

Value:	ON(1)	Display communication errors
	OFF(0)	Not display communication errors (default)

(Example)

```
SYST:CONF:TRAC ON
```

Response: NR1

SYST:ERR

Reads the oldest error information or event information from the error queue.

The error queue can store up to 255 errors. -> Tutorial “Error Checking”

Use the *CLS command to clear the error queue.

Command

```
SYSTem:ERRor[:NEXT]?
```

Response

Returns the oldest error or event information in the error/event queue as follows:

(Example) When there are no errors or events

+0"No error"

(Example) When a command that cannot be executed under the current operating conditions has been received

-221,"Settings conflict"

SYST:ERR:COUN

Queries the number of unread errors in the error queue.

Command

```
SYSTem:ERRor:COUNt?
```

Response

NR1

Returns +0 if there are no errors.

SYST:KLOC

Sets and releases the panel operation lock (keylock).

Command

```
SYSTem:KLOCk <boolean>
```

```
SYSTem:KLOCk?
```

Parameter

Value:	ON(1)	Key lock is set.
	OFF(0)	Key lock is released.

(Example)

```
SYSTem:KLOC ON
```

Response: NR1

SYST:LOC/ SYST:REM/ SYST:RWL

This is an old style command.

When creating new programs, use SYST:COMM:RLST.

Command

```
SYSTem:LOCal
SYSTem:REMote
SYSTem:RWLock
```

SYST:OPT

Queries the option that are installed in the PCR-MA.

This is an alias for *OPT.

Command

```
SYSTem:OPTion?
```

Response

Returns the optional interface board that is installed in the PCR-MA in comma-separated string format. Returns 0 if there is no option installed.

“IB22”	IB22 GPIB interface board
“EX08”	EX08-PCR-MA External signal interface board

SYST:VERS

Queries the version of the SCPI specifications to which the PCR-MA conforms.

Command

```
SYSTem:VERSion?
```

Response

Returns 1999.0.

TRIGger Command

TRIG:ACQ

Executes a software trigger for a ACQuire trigger subsystem.

Command

```
TRIGger:ACQuire[:IMMediate]
```

TRIG:ACQ:SOUR

Sets the condition (trigger source) that determines when the ACQuire trigger sub-system actually starting the measuremen after the PCR-MA receives the INIT:ACQ command.

Command

```
TRIGger:ACQuire:SOURce <character>
```

```
TRIGger:ACQuire:SOURce?
```

Parameter

Value:	IMMediate	Start the measurement immediately (default)
	BUS	Wait for a software trigger (*TRG, TRIG:ACQ, or IEEE488.1 get (Group Execute Trigger)) to start the measurement

Settings are reset to default when the *RST command is sent.

(Example)

```
TRIG:ACQ:SOUR BUS
```

Response: character

TRIG:TRAN

Executes a software trigger for the TRANsient trigger subsystem.

Command

```
TRIGger:TRANsient[:IMMediate]
```

TRIG:TRAN:SOUR

Sets the condition (trigger source) that determines when the TRANsient trigger subsystem actually changing the setting after the PCR-MA receives the INIT:TRAN command.

Command

```
TRIGger:TRANsient:SOURce <character>
TRIGger:TRANsient:SOURce?
```

Parameter

Value:	IMMediate	The setting is changed immediately (default).
	BUS	The setting is changed when a software trigger is received (use the *TRG, TRIG:TRAN, or IEEE488.1 get (Group Execute Trigger) command to change the setting; default).

Settings are reset to default when the *RST command is sent.

(Example)

```
TRIG:TRAN:SOUR BUS
```

Response: character

TRIG:SYNC:PHAS

Sets the phase angle of the OUTPUT on.

This is valid when the output-on phase control is on (TRIG:SYNC:SOUR PHAS).

Command

```
TRIGger:SYNChronize:PHASe[:ON] <numeric>
TRIGger:SYNChronize:PHASe[:ON]?
```

Parameter

Value:	0 to 359	phase angle of the output on (0 by default)
Unit:	DEG	

Settings are reset to default when the *RST command is sent.

(Example)

```
TRIG:SYNC:PHAS 270
```

Response: NR3

TRIG:SYNC:SOUR

Sets the OUTPUT on phase control when OUTP ON is sent.

Use TRIG:SYNC:PHAS to set the output-on phase angle.

Command

```
TRIGger:SYNChronize:SOURce <character>
TRIGger:SYNChronize:SOURce?
```

Parameter

Value:	IMMediate	Disables OUTPUT on phase control (default)
	PHAse	Enables OUTPUT on phase control

Settings are reset to default when the *RST command is sent.

(Example)

```
TRIG:SYNC:SOUR PHAS
```

Response: character

A List of Errors

Command errors

An error in the range [-199, -100] indicates that an IEEE 488.2 syntax error has been detected by the instrument's parser. The occurrence of any error in this class shall cause the Command Error (bit 5) in the event status register to be set.

Error code		Error message description
-100	Command error	This is the generic syntax error.
-101	Invalid character	A syntactic element contains a character that is invalid for that type.
-102	Syntax error	An unrecognized command or data type was encountered.
-103	Invalid separator	The parser was expecting a separator and encountered an illegal character.
-104	Data type error	The parser recognized a data element different than one allowed.
-105	GET not allowed	A Group Execute Trigger was received within a program message.
-108	Parameter not allowed	More parameters were received than expected for the header.
-109	Missing parameter	Fewer parameters were recieved than required for the header.
-110	Command header error	An error was detected in the header.
-112	Program mnemonic too long	The header contains more that twelve characters.
-113	Undefined header	The header is undefined for this device.
-114	Header suffix out of range	The value of a numeric suffix attached to a program mnemonic.
-115	Unexpected number of parameters	The number of parameters received does not correspond to the number of parameters expected.
-120	Numeric data error	This error is generated when parsing a data element that appears to be numeric, including the nondecimal numeric types.
-128	Numeric data not allowed	A legal numeric data element was received, but the device does not accept one in this position for the header.
-130	Suffix error	This error is generated when parsing a suffix.
-131	Invalid suffix	The suffix does not follow the syntax or the suffix is inappropriate for this device.
-134	Suffix too long	The suffix contained more than 12 characters.
-138	Suffix not allowed	A suffix was encountered after a numeric element which does not allow suffixes.
-140	Character data error	This error is generated when parsing a character data element.

Error code		Error message description
-141	Invalid character data	Either the character data element contains an invalid character or the particular element received is not valid for the header.
-144	Character data too Long	The character data element contains more than twelve characters.
-148	Character data not allowed	A legal character data element was encountered where prohibited by the device.
-150	String data error	This error is generated when parsing a string data element.
-151	Invalid string data	A string data element was expected, but was invalid for some reason.
-158	String data not allowed	A string data element was encountered but was not allowed by the device at this point in parsing.
-160	Block data error	This error is generated when parsing a block data element.
-170	Expression error	This error is generated when parsing an expression data element.
-180	Macro error	This error is generated when defining a macro or executing a macro.

Execution errors

An error in the range [-299, -200] indicates that an error has been detected by the instrument's execution control block. The occurrence of any error in this class shall cause the Execution Error (bit 4) in the event status register to be set.

Error code		Error message description
-200	Execution error (generic)	This is the generic syntax error for devices that cannot detect more specific errors.
-203	Command protected	Indicates that a legal password-protected program command or query could not be executed because the command was disabled.
-210	Trigger error	Trigger error.
-211	Trigger ignored	Indicates that a GET, *TRG, or triggering signal was received and recognized by the device but was ignored because of device timing considerations.
-213	Init ignored	Indicates that a request for a measurement initiation was ignored as another measurement was already in progress.
-214	Trigger deadlock	Indicates that the trigger source for the initiation of a measurement is set to GET and a subsequent measurement query was received.
-220	Parameter error	Indicates that a program data element related error occurred.
-221	Settings conflict	Indicates that a legal program data element was parsed but could not be executed due to the current device state.
-222	Data out of range	Indicates that a legal program data element was parsed but could not be executed because the interpreted value was outside the legal range as defined by the device.
-223	Too much data	Indicates that a legal program data element of block, expression, or string type was received that contained more data than the device could handle due to memory or related device-specific requirements.
-224	Illegal parameter value	Used where an exact value, from a list of possible values, was expected.
-230	Data corrupt or stale	Possibly invalid data; new reading started but not completed since last access.
-241	Hardware missing	Indicates that a legal program command or query could not be executed because of missing device hardware.

Device-specific errors

An error in the range [-399, -300] indicates that the instrument has detected an error which is not a command error, a query error, or an execution error. The occurrence of any error in this class should cause the device-specific error bit (bit 3) in the event status register to be set.

Error code		Error message description
-310	System error	Indicates that some error, termed "system error" by the device, has occurred.
-311	Memory error	Indicates some physical fault in the device's memory, such as parity error.
-313	Calibration memory lost	Indicates that nonvolatile calibration data used by the *CAL? command has been lost.
-314	Save/recall memory lost	Indicates that the nonvolatile data saved by the *SAV? command has been lost.
-315	Configuration memory lost	Indicates that nonvolatile configuration data saved by the device has been lost.
-330	Self-test failed	Self-test failed
-350	Queue overflow	A specific code entered into the queue in lieu of the code that caused the error. This code indicates that there is no room in the queue and an error occurred but was not recorded.
-360	Communication error	Communication error when the flow control is turned off. This error applies when the RS232C interface is used.
-362	Framing error in program message	Framing error. This error applies when the RS232C interface is used.
-363	Input buffer overrun	Buffer overrun error. This error applies when the RS232C interface is used.

Error code		Error message description
-365	Time out error	Time out error. This error applies when the RS232C interface is used.

Query errors

An error in the range [-499, -400] indicates that the output queue control of the instrument has detected a problem with the message exchange protocol described in IEEE 488.2, chapter 6. The occurrence of any error in this class shall cause the Query Error (bit 2) in the event status register to be set.

Error code		Error message description
-400	Query error (generic)	This is the generic query error for devices that cannot detect more specific errors.
-410	Query INTERRUPTED	Received a new command before the response was read.
-420	Query UNTERMINATED	The controller attempted to read the response after the device received an unsupported query or has not received a query. The -100 "COMMAND ERROR" error and this error are stored in the error queue. The controller will time out.
-430	Query DEADLOCKED	The error queue, input buffer, and output buffer are full when sending large binary data as a response, and the transmission timing is off.
-440	Query UNTERMINATED after indefinite response	Received a separate query in semicolon-delimited format after a query that returns a response in an indefinite form. (Example: A command such as the following. *IDN?;SYSTT:ERR?)

Operation Complete Event

An error in the range [-899: -800] is used when the instrument wishes to report a 488.2 operation complete event to the error/event queue. This event occurs when instrument's synchronization protocol, having been enabled by an *OPC command, completes all selected pending operations. This protocol is described in IEEE 488.2, section 12.5.2. This event also sets the operation complete bit (bit 0) of the Standard Event Status Register.

Error code		Error message description
-800	Operation complete	The instrument has completed all selected pending operations in accordance with the IEEE 488.2, 12.5.2 synchronization protocol.

Device-dependent errors

The occurrence of any error in this class shall cause the Device Dependent Error (bit 3) in the event status register to be set.

Errors that have a number of +900 or greater are generated as a result of the self test that is run when the *TST? query is received.

Error code	
+131	Operation conflicts with OUTPUT ON state
+132	Operation conflicts with PROTECTION state
+133	Operation conflicts with OUTPUT COUPLE setting
+134	Operation conflicts with AUTO RANGE
+135	Operation conflicts with EXT-AC or EXT-DC program source
+140	LOW RANGE conflicts with existing VOLT[:IMM] setting
+141	LOW RANGE conflicts with existing VOLT:TRIG setting
+142	LOW RANGE conflicts with existing VOLT:OFFS[:IMM] setting
+143	LOW RANGE conflicts with existing VOLT:OFFS:TRIG setting
+150	Overlaid peak value of AC (IMM) and DC (IMM) components is too large
+151	Overlaid peak value of AC (IMM) and DC (TRIG) components is too large
+152	Overlaid peak value of AC (TRIG) and DC (IMM) components is too large
+153	Overlaid peak value of AC (TRIG) and DC (TRIG) components is too large
+160	IMM setting is out of range
+161	TRIG setting is out of range
+162	Overlaid peak value with existing AC (IMM) component is too large
+163	Overlaid peak value with existing AC (TRIG) component is too large
+164	Overlaid peak value with existing DC (IMM) component is too large
+165	Overlaid peak value with existing DC (TRIG) component is too large
+166	LIM:LOW setting is out of range
+167	LIM:UPP setting is out of range
+168	IMM setting value and soft-limits conflict with LOWER<=VALUE<=UPPER condition
+169	TRIG setting value and soft-limits conflict with LOWER<=VALUE<=UPPER condition
+302	Option not installed
+309	Cannot initiate, voltage and frequency in fixed mode
+901	HW failure (DSP DETECT state)
+902	HW failure (DSP VCC state)
+903	HW failure (DSP INPUT state)
+904	HW failure (DSP Communication Failure)

Processing Time of Commands

The command processing time is the time until the next command is accepted.

The processing times indicated here are typical values. They are not guaranteed.

The processing times vary depending on the settings and the measurement conditions.

It does not include the response time of the hardware.

Command	Processing time (ms)					Description
	GPIB[*1]	USB	LAN[*2]			
			VXI-11	HiSlip	SCPI-RAW	
VOLT	1.997	1.809	1.809	1.123	0.05	Sets the voltage
MEAS:VOLT:AC?	665.531	665.640	665.578	665.516	665.571	Queries the measured voltage output
FREQ	1.997	1.825	1.825	1.170	0.05	Sets the frequency
MEAS:CURR:AC?	665.435	665.435	665.734	666.249	665.431	Queries the measured current output
*RST	163.645	163.645	163.988	88.827	0.06	Performs a device reset.

[*1]: Using USB-GPIB by National Instruments

[*2]: 100BASE-TX Ethernet

Tutorial

Programming AC Output

■ Setting the AC voltage and frequency

The AC output voltage and frequency are controlled with the VOLTage and FREQuency commands. Prior to programming the output, it is recommended that the appropriate output mode and voltage range be selected.

```
OUTPut:COUPling AC    'Sets the output mode to AC mode
VOLTage:RANGe 155    'Sets the voltage range to the 155V range
VOLTage 110    'Set the AC voltage to 110 V
FREQuency 55    'Sets the frequency to 55 Hz
OUTPut ON    'Turn the output on
```

■ Setting the AC voltage limit and frequency limit

The maximum allowable value for VOLTage varies depending on the VOLTage:RANGe setting.

The minimum and maximum allowable values for VOLTage and FREQuency commands may vary depending on the VOLTage:LIMit and FREQuency:LIMit settings. The VOLTage and FREQuency settings must be specified within the upper and lower limits.

The voltage limit and frequency limit settings are safety interlock functions that prevent unexpected miss-operation or miss-programming. They are not output limiting functions.

```
VOLTage:RANGe 155    'Sets the voltage range to the 155V range
VOLTage:LIMit:UPPer MAX    'Sets the voltage upper limit to maximum
VOLTage:LIMit:LOWer MIN    'Sets the voltage lower limit to minimum
VOLTage 110    'Sets the AC voltage to 110 V
FREQuency:LIMit:UPPer MAX    'Sets the frequency upper limit to 500 Hz
FREQuency:LIMit:LOWer MIN    'Sets the frequency lower limit to 40 Hz
FREQuency 55    'Sets the frequency to 55 Hz
```

Above example expands the upper/lower limits to the widest span allowing the VOLTage and FREQuency to be set to any value within the given range.

When the VOLTage:RANGe is set to 155 V, VOLTage setting cannot exceed 157.5 V.

■ Query

To query the maximum and minimum allowed values for the VOLTage and FREQuency commands, use the query with the MINimum and/or MAXimum parameters.

```
VOLTage? MINimum
```

VOLTage? MAXimum
FREQuency? MINimum
FREQuency? MAXimum

Programming DC Output

■ Setting the DC voltage

The DC output voltage is controlled with the VOLTage:OFFSet command. Prior to programming the output, it is recommended that the appropriate output mode and voltage range be selected.

```
OUTPut:COUPling DC    'Sets the output mode to DC mode
VOLTage:RANGe 155    'Sets the voltage range to the 155V range
VOLTage:OFFSet 40    'Sets the DC voltage to 40 V
OUTPut ON    'Turns the output on
```

Once the power supply output is enabled (turned on), voltage range settings cannot be changed. On the other hand, the VOLTage:OFFSet setting can always be changed while the output is on.

■ Setting the DC voltage limit

The maximum allowable value for VOLTage:OFFSet also varies depending on the VOLTage:RANGe setting. The minimum and maximum allowable values for VOLTage:OFFSet command may vary depending on the VOLTage:OFFSet:LIMit settings.

```
VOLTage:RANGe 155    'Sets the voltage range to the 155V range
VOLTage:OFFSet:LIMit:UPPer MAX    'Sets the voltage upper limit to maximum
VOLTage:OFFSet:LIMit:LOWer MIN    'Sets the voltage lower limit to minimum
VOLTage:OFFSet 40    'Sets the DC voltage to 40 V
```

Above example expands the upper/lower limits to the widest span allowing the VOLTage:OFFSet to be set to any value within the given range.

When the VOLTage:RANGe is set to 155 V, VOLTage:OFFSet setting cannot exceed +/-222.5.0 V. The VOLTage:RANGe specifies the voltage range using the AC voltage expression. The allowable DC voltage range for the 155 V range is +/-222.5 V, and that for the 310 V range is +/-445.0 V.

By *RST default, the :VOLTage:OFFSet:LIMit:LOWer setting is not set to its MINimum. It is set to 0 for operational safety.

■ Query

To query the maximum and minimum allowed values for the VOLTage:OFFSet command, use the query with the MINimum and/or MAXimum parameters.

```
VOLTage:OFFSet? MINimum
VOLTage:OFFSet? MAXimum
```

State of Trigger subsystem

PCR-MA has three different trigger subsystems -TRANsient, ACQuire, and SYNChronize.

The TRANsient and ACQuire trigger subsystems have three states (IDLE state, INITiated state, WTG state).

The SYNChronize subsystem is always in the INITiated state.

■ IDLE state

When the PCR-MA is turned on, all the trigger subsystems are in the IDLE state. In this state, the trigger subsystems ignore all triggers. Sending one of the following commands at any time also returns the trigger subsystems to the IDLE state.

The sequence does not start in the IDLE state, even when TRG is sent.

ABORt (":INIT:CONT:ACQ OFF;:ABOR" if the auto continue mode is turned on)
*RST
*RCL
IEEE488.1 sdc(Selected Device Clear) or dcl(Device Clear)

■ INITiated state

If INIT is sent in the IDLE state, the trigger function starts and the PCR-MA enters the INITiated state.

If the trigger source is set to IMMediate, the settings are changed immediately, or the measurement, power line abnormality simulation, or sequence starts immediately.

If the trigger source is set to BUS, the PCR-MA enters the WTG (Waiting for Trigger) state.

■ WTG (Waiting for Trigger) state

If a trigger is received in the WTG state, the settings are changed, or the measurement starts.

Using Triggers to Change Settings (TRANsient)

PCR-MA has three different trigger subsystems -TRANsient, ACQuire, and SYNChronize.

The TRANsient subsystem changes the PCR-MA settings.

■ State

The three states are available in the TRANsient subsystem. -> Tutorial "State of Trigger subsystem"

■ Output Change Control

Using TRANsient subsystem allows you to synchronize the output changes with a given trigger. This is convenient if you want to synchronize output changes with other instrument actions such as external DC power supply or electronic loads.

To reserve triggered settings, use the VOLTage:TRIGgered and FREQuency:TRIGgered commands. Keep in mind that the MODE settings for each output item must be set to STEP prior to using triggers.

VOLTage 110 'Sets the voltage to 110 V
FREQuency 60 'Sets the frequency to 60 Hz
VOLTage:MODE STEP 'Sets the voltage trigger mode to STEP
FREQuency:MODE STEP 'Sets the frequency trigger mode to STEP
VOLTage:TRIGgered 100 'Sets the voltage that will be set when a trigger is received to 100 V
FREQuency:TRIGgered 50 'Sets the frequency that will be set when a trigger is received to 50 Hz
TRIGger:TRANsient:SOURce BUS 'Sets the trigger source to BUS
INITiate:TRANsient 'Initiates TRANsient subsystem (starts the trigger function)
TRIGger:TRANsient 'Applies a software trigger to TRANsient subsystem

If you repeatedly change the output, a trigger error (-210) may occur. By using the *OPC command, you can prevent this error. -> Tutorial "Waiting for Operation Complete"

TRIGger;*OPC 'Apply a trigger and wait until the output change is complete.

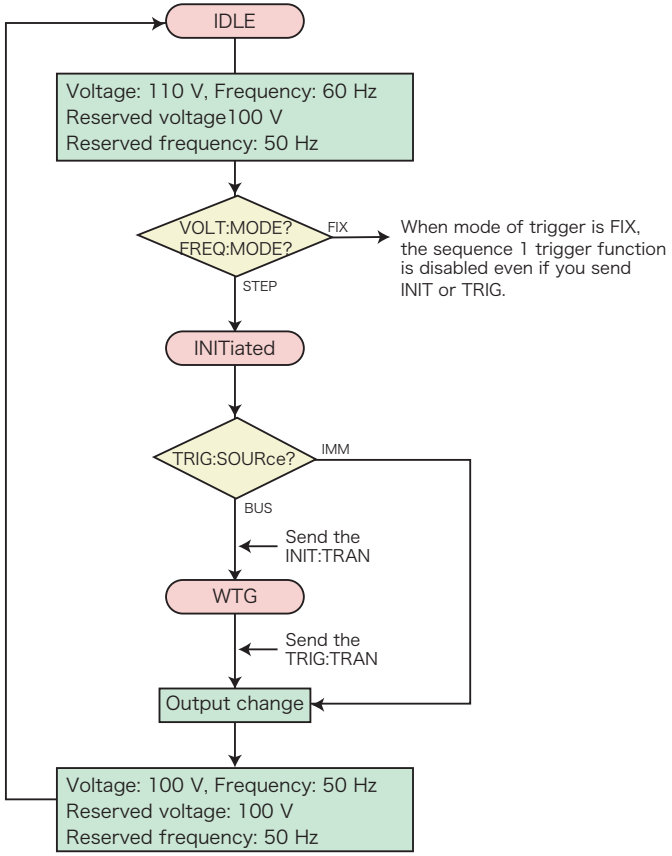

The TRIGger:TRANsient:SOURce command sets the trigger source to BUS or IMMediate.

When the Trigger Source is set to IMMediate, the change is executed immediately causing the voltage and/or frequency to change to a new setting. When the Trigger Source is set to BUS, the trigger subsystem goes to the WTG (Waiting For Trigger) state. When a software trigger is applied with the TRIGger:TRANsient:IMMediate or *TRG command, the change is executed.

When the operation is completed, the trigger subsystem returns to the IDLE state again. When an ABORt or an equivalent command is sent without executing the trigger, the change is cancelled, and then the trigger subsystem returns to the IDLE state.

Setting items that are programmable in the TRANsient subsystem are VOLTage, VOLTage:OFFSet, and FREQuency. CURRent limit settings are not associated with the trigger subsystem.

The TRIGger:TRANsient:IMMediate command applies a software trigger to the TRANsient subsystem.

You can also use the *TRG command or the IEEE488.1 get (Group Execute Trigger) command for the same purpose. This command applies a software trigger to the TRANsient subsystem and ACQuire subsystem, so if there are other trigger subsystem that are in the INITiated state, their sequences will also be executed at the same time.

Operation using a software trigger

When ABOR is sent, INIT:TRAN is cancelled. The VOLT:TRIG setting does not change.

The following table shows the responses when the voltage is set to 20 V (VOLT 20) and when the target value to which the voltage will change when a trigger is received is set to 10 V (VOLT:TRIG 10).

	Response	
	VOLT?	VOLT:TRIG?
Immediately after the setting is made.	20 V	10 V
After a trigger is sent.	10 V	10 V
After *RST is sent.	0 V	0 V
When "VOLT 30" (to change the voltage) is sent before sending a trigger	30 V	30 V (cancel)

Measurement (ACQuire)

PCR-MA has three different trigger subsystems -TRANsient, ACQuire, and SYNChronize.

The ACQuire subsystem is the measurement trigger subsystem. This subsystem is used to measure values such as voltage, current, and power.

There are easy measurements and advanced measurements.

■ Easy Measurement

The PCR-MA has the capability to return voltage, current, and power measurement values. The easiest way is use the MEASure commands.

The MEASure commands immediately start a new measurement. This is the easiest way to make measurements, however simultaneity for multi-item measurements are lost, because each MEASure command starts a new measurement. To avoid this, consider the advanced measurement approach that is described later in this manual, allowing separate control for measurement initiation and data query.

Voltage/Current Measurement

In AC mode, use the AC measurement queries.
MEASure:VOLTage:AC? ‘Queries AC voltage in volts-rms
MEASure:CURRent:AC? ‘Queries AC current in amps-rms

In DC mode, use the DC measurement queries.
MEASure:VOLTage:DC? ‘Queries DC voltage in volts
MEASure:CURRent:DC? ‘Queries DC current in amps

The current measurement function also has the following additional items:
MEASure:CURRent:AMPLitude:MAXimum? ‘Queries peak current in amps
MEASure:CURRent:AMPLitude:MAXimum:HOLD? ‘Queries peak current (the held value)
MEASure:CURRent:CREStfactor? ‘Queries crest factor

The MEASure:CURRent:AMPLitude:MAXimum:HOLD command queries the maximum peak current since the PCR-MA was turned on or since it was explicitly cleared. To clear the peak current (held value), use the SENSe:CURRent:PEAK:CLEar command.
SENSe:CURRent:PEAK:CLEar

By *RST and *RCL default, the peak current (held value) is not cleared.

Available measurement items vary depending on the selected output mode. For example, DC measurement cannot be performed while AC mode is selected.

Peak current measurement and peak hold measurement can be performed in either AC or DC output mode.

Normally, it takes approximately 330 ms to complete a single measurement. This means that sending MEASure queries multiple times requires long data acquisition time. If you want to acquire multiple items, it is recommended that you use the advanced approach described later.

The PCR-MA supports READ commands that also initiate a new measurement and data query, however, READ and MEASure operate exactly the same, as they are aliases.

Power Measurement

In AC mode, use the AC measurement queries.
MEASure:POWer:AC? ‘Queries AC real power in watts
MEASure:POWer:AC:APParent? ‘Queries AC apparent power in volt-amps
MEASure:POWer:AC:REACtive? ‘Queries AC reactive power in volt-amps-reactive
MEASure:POWer:AC:PFACtor? ‘Queries AC power factor

In DC mode, use the DC measurement queries.
MEASure:POWer:DC? ‘Queries DC power in watts

■ Advanced Measurement

In advanced measurement, you can separate and control the starting of measurement and the referencing of data.

State

The three states are available in the sequence operation.-> Tutorial “State of Trigger subsystem”

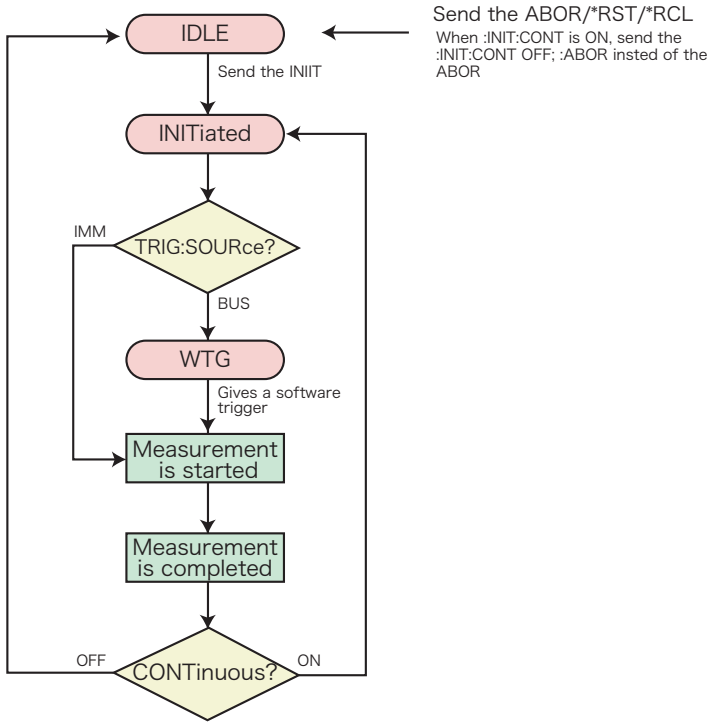

Voltage/Current/Power Measurement

To start a new measurement, set the trigger source to IMMediate and use the INITiate command.

TRIGger:ACQuire:SOURce IMMediate ‘Selects trigger source to IMMediate
INITiate:ACQuire ‘Initiates ACQuire subsystem

If you want the ACQuire subsystem to start the measurement on a software trigger, change the trigger source to BUS.

TRIGger:ACQuire:SOURce BUS ‘Selects trigger source to BUS
INITiate:ACQuire ‘Initiates ACQuire subsystem
TRIGger:ACQuire ‘Applies a software trigger to ACQuire subsystem

When the measurement is completed, measurement data can be queried with the FETCh query commands.

FETCh:VOLTage:AC? ‘Queries AC voltage in volts, without new measure
FETCh:CURRent:AC? ‘Queries AC current in amps, without new measure
FETCh:POWer:AC? ‘Queries AC real power in watts, without new measure
FETCh:POWer:AC:APParent? ‘Queries AC apparent power in volt-amps, without new measure

If you send a FETCh command before the measurement is complete, correct measurement data will not be obtained. By using the *OPC command, you can obtain correct measurement data. -> Tutorial “Waiting for Operation Complete”

:INITiate:ACQuire;*OPC ‘Initiate ACQuire subsystem and wait for the measurement to complete.

The TRIGger:ACQuire:SOURce command sets the trigger source to BUS or IMMediate. The INITiate:ACQuire command makes the ACQuire subsystem leave the IDLE state and go the initiated state.

When the Trigger Source is set to IMMediate, the action is executed immediately causing a new measurement to start. When the Trigger Source is set to BUS, the ACQuire subsystem goes to the WTG (Waiting For Trigger) state. When a software trigger is applied with the TRIGger:ACQuire or *TRG command, the measurement action is executed. When the operation is completed, the ACQuire subsystem returns to the IDLE state again. When an ABORt or an equivalent command is sent without executing the trigger, the measurement action is cancelled, and then the ACQuire subsystem returns to the IDLE state.

The ABORt command and IEEE488.1 sdc/dcl commands simply abort the measurement task that is in progress. It does not have a feature to invalidate any measurement data that has been acquired. On the other hand, the *RST and *RCL commands not only abort the measurement task, but also invalidate the acquired measurement data. This means that the “*RST;:FETC:VOLT:AC?” command line will generate an error, because no measurement data can be fetched and there is no new measurement is scheduled.

The only difference between MEASure and FETCh commands is that the MEASure command starts a new measurement while the FETCh command does not. Availability for measurement items varies depending on the output mode, but it is exactly the same for MEASure and FETCh.

■ Auto continue mode

If auto continue mode is turned on, measured data is automatically refreshed without having to send the INIT command each time. In normal cases, turn auto continue mode off (default).

When the sequence operation auto continue mode is turned on

When the trigger source is set to IMMediate, the measurement starts immediately. When the operation completes, the measurement starts automatically. However, if auto continue mode is on, the MEASure, READ, and FETCh queries operate in the same manner. This means that sending multiple FETCh queries results in different measurement results, and simultaneity is lost.

When the trigger source is set to BUS, the PCR-MA waits for a software trigger before making the measurement. When the operation has completed, the PCR-MA waits for the next trigger.

The ABORt command to the measurement function is invalid, because the trigger subsystem automatically exits the IDLE state even if aborted. The *RST/*RCL command resets the continuous operation to off.

When the sequence operation auto continue mode is turned off

The measurement currently in progress continues unless ABOR is sent. The operation does not automatically continue to the new change or measurement.

Output-on Phase Control (SYNChronize)

PCR-MA has three different trigger subsystems -TRANsient, ACQuire, and SYNChronize.

The SYNChronize subsystem is the output ON phase control trigger subsystem.

Using SYNChronize subsystem allows you to synchronize the output ON changes with a specific AC output phase angle.

TRIGger:SYNChronize:SOURce PHASe ‘Configures the PCR-MA so that the phase will be controlled when the output is turned on

TRIGger:SYNChronize:PHASe 270 ‘Sets the phase angle at 270 deg

OUTPut ON ‘Turns the output on

When the power supply output is changed from OFF to ON state, the changing action is synchronized to the specified phase angle.

To disable the output-on phase control, set the trigger source to IMMediate.

TRIGger:SYNChronize:SOURce IMMediate

The output-on phase control is applied only when the output is changed from OFF to ON. It is not applied when the output changes from ON to OFF or when other settings such as the AC voltage setting, DC voltage setting, and frequency setting change.

The output-on phase control is not a function that synchronizes the output frequency to the input commercial AC line.

The SYNChronize subsystem does not have INITiate commands. It is always initiated and cannot be aborted.

Waiting for Operation Complete

The *OPC command has a capability to wait for an operation to complete. Operation complete means that there is no pending operation that is still in progress. It takes approximately 110 ms for a measurement to be completed. The PCR-MA is not in the operation complete state while a measurement is ongoing. When the measurement completes, if there are no other operations waiting to be completed, the PCR-MA enters the operation complete state.

When the *OPC command is sent, the PCR-MA enters the Operation Complete Command Active State (OCAS). When the measurement is completed and there is no other operation pending, the PCR-MA returns to Operation Complete Command Idle State (OCIS) and sets the OPC bit (bit 0) to TRUE (1) in the Standard Event Status Register. This information can be confirmed with the *ESR? query command by checking the OPC bit (bit 0).

The following example makes a new measurement and sends the *OPC. When the measurement is completed, an SRQ (Service Request) is generated, as the Standard Event Status Enable Register and the Service Request Enable Register are un-masked so that an SRQ can be signaled by the Operation Complete event.

*ESE 1;*SRE 32;*CLS;:INITiate:IMMediate:ACQuire;*OPC
<Wait for the SRQ to be generated.>

Using the *OPC? query command instead of the *OPC command makes the PCR-MA enter the Operation Complete Query Active State (OQAS). When the measurement is completed and there is no other operation pending, the PCR-MA returns to the Operation Complete Query Idle State (OQIS) and sets the response data to “1” (in NR1 format) in the output queue.

INITiate:IMMediate:ACQuire;*OPC?
<Read the response>

At power-on or after the IEEE488 sdc/dcl, *RST command is sent, the PCR-MA is in the OCIS and OQIS state

Status Monitoring

The PCR-MA has two mandatory SCPI standard registers, STATus:OPERation and STATus:QUEStionable, in addition to the IEEE488.2 standard registers.

■ Register basics

All SCPI registers have standard event/filter architecture, employing CONDition, EVENt, ENABle, and optionally PTRansition and NTRansition. CONDition and EVENt are read-only registers working as status indicators, and ENABle, PTRansition and NTRansition are read-write registers working as event and summary filters.

■ STATus:OPERation

The STATus:OPERation register records events or signals that occur during normal operation.

For example, to check if the PCR-MA is being regulated in CV state, check the CV bit (bit 8) on the STATus:OPERation register.

```
STATus:OPERation?   'Check whether the CV bit is set
```

■ STATus:QUEStionable

The STATus:QUEStionable register records events or signals that indicate abnormal operation.

To check if the protection function is working, check the OV bit (bit 0) on the STATus:QUEStionable register.

```
STATus:QUEStionable?   'Check whether the OV bit is set
```

■ PON (Power ON) bit

The PON bit (bit 7) in the event status register is set whenever the PCR-MA is turned on. The most common use for the PON bit is to generate an SRQ at power-on to keep track of unexpected loss of power or power line failure. To do this, follow the steps shown below.

1. **Set *PSC (Power-on Status Clear) to 0 (or OFF).**
   Enable the backup function of the event status enable register and service request enable register (*PSC 0).

2. **Set the PON bit (bit 7) of the event status enable register.**
   Permit the transmission of a power-on event to the upper layer (*ESE 128).

3. **Set the ESB bit (bit 5) of the status byte enable register.**
   Permit the generation of an SRQ caused by a standard event (*SRE 32).

*PSC 0;*ESE 128;*SRE 32

Though the SRQ feature itself is provided by communication protocol on the USB interface or LAN (VXI-11/ HiSLIP) interface, a Connection Lost error in the VISA I/O session occurs immediately before the power-on event. It may be difficult to handle PON events when using the USB/LAN interface.

Error Checking

■ Error/event queue

The SCPI specifications define a standard error reporting scheme, Error/Event Queue. This is a FIFO (First In First Out) queue, which records errors and events. The maximum number of errors/events that the PCR-MA can record is 255. Each error/event can be read with the SYSTem:ERRor query.

SYSTem:ERRor?

The response to this query contains a numeric part (error/event number) and a textual description, such as:

-222,"Data out of range"

The error/event queue is empty when the *CLS common command is sent, when the last item in the queue is read, and when the PCR-MA is turned on. When the error/event queue is empty, the query returns the following:

0,"No error"

■ Displaying communication errors

The PCR-MA has a debug trace function. The oldest item among the errors and events (if they are present) can be displayed on the PCR-MA. This function is convenient when you debug your remote applications.

While an error/event item is displayed on the panel, the normal voltmeter and ammeter are disabled.

If the error/event queue is empty, the debug trace function does not display any errors. Sending the *CLS command clears the communication error display.

If in local mode, the debug trace function is temporarily disabled.

The communication error display can be enabled or disabled with the SYSTem:CONFigure:TRACe command.

SYSTem:CONFigure:TRACe {ON|OFF}

Visual Basic 2017

■ Setting the "Project"

First, add the communication middleware (VISA library) to the project.

Click References on the Project menu to open the Reference Manager window.

On the navigation pane, click COM and then Type Libraries.

From the list in the center of the window, select “VISA COM *.* Type Library” (where *.* is the VISA library version number), and select the check box.

Click OK to close the dialog box.

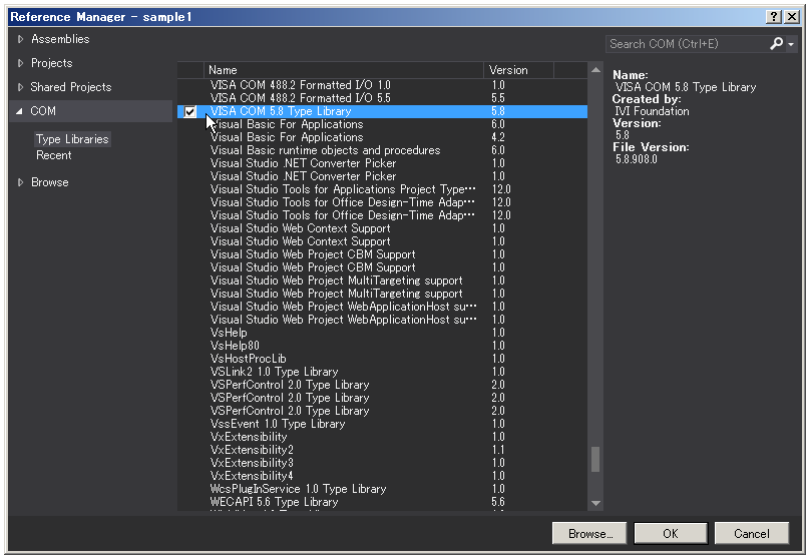

■ Communication through GPIB, USB, or LAN

Open the VISA

To communicate with an GPIB, USB, or LAN device using VISA, you have to first open VISA. When you open VISA, specify the I/O resource.

Example : To open VISA by using USB

```
Set rm = CreateObject("VISA.GlobalRM")
Set msg = rm.Open("USB::0x0B3E::0x1050::00000001::INSTR", NO_LOCK, 0, "")
```

"USB::0x0B3E::0x1050::00000001::INSTR" is the I/O resource.

The I/O resource is specified by the following constructions. The part indicated with [ ] can be omitted. Enter the appropriate values in the parts specified in oblique characters.

GPIB		GPIB[*board*]::*PrimaryAddress*[::*SecondaryAddress*][::INSTR] Example: The primary address 3 of the measuring instrument connected to GPIB0. GPIB0::3::INSTR
USB		USB[*board*]::*VendorID*::*ProductID*::*SerialNumber*[::*InterfaceNumber*][::INSTR] Example: The USNTMC measuring instrument having vendor ID (VID) 2878, Product ID (PID) 4176 and serial number "00000001." USB0::0x0B3E::0x1050::00000001::INSTR
LAN[*1]	VXI-11	TCPIP[*board*]::*hostname*[::inst*0*][::INSTR] Example :The measuring instrument whose IP address (hostname) is 169.254.7.8. TCPIP::169.254.7.8::INSTR You can also set the LAN device name using the host name.
	HiSLIP	TCPIP[*board*]::*hostname*::hislip0[::INSTR] Example :The measuring instrument whose IP address (hostname) is 169.254.7.8. TCPIP::169.254.7.8::hislip0::INSTR You can also set the LAN device name using the host name.
	SCPI-RAW	TCPIP[*board*]::*hostname*::*portno*::SOCKET Example :The measuring instrument whose IP address (hostname) is 169.254.7.8. (The "portno" setting of the PCR-MA is always 5025.) TCPIP::169.254.7.8::5025::SOCKET You can also set the LAN device name using the host name.

[*1]: The hostname must be a valid mDNS hostname (a Bonjour hostname that ends in ".local") or a DNS hostname that is managed by an external DNS server (a full-qualified domain name—FQDN). If you are using an mDNS hostname, Apple Bonjour (alternatively, iTunes or Safari) must be installed on your PC.

For VISA, the alias can be used for the I/O resource.

When using the alias for the I/O resource, even if the alias name is hard-coded directly in the application, the alias name can be easily converted to the appropriate I/O resource name.

Example : When using the alias (MYDEV1) for the I/O resource.

```
Set msg = rm.Open("MYDEV1", NO_LOCK, 0, "")
```

When the alias is used, the actual I/O resource is specified by an external configuration table. When using USB (example for KI-VISA):

Please refer to the applicable VISA manual.

Controlling the devices

Next, use "Read" and "Write" commands to control devices. You must include line-feed codes in the command strings.

Example:

```
msg.WriteString ("VOLT 110" & vbLF)    'Set the AC voltage to 110 V
msg.WriteString ("FREQ 60" & vbLF)     'Set the frequency to 60.0 Hz
msg.WriteString ("OUTP 1" & vbLF)      'Turn the output on
```

Closing the VISA

Close the VISA at the end.

You only need to include one "open" VISA command and one "close" VISA command in the program.

```
msg.Close
```

■ Sample program

```
Imports Ivi.Visa.Interop

Public Class Form1

  Dim rm As ResourceManager
  Dim msg As IMessage

  Sub Form1_Load(ByVal sender As System.Object, ByVal e As System.EventArgs) Handles MyBase.Load
    rm = CreateObject("VISA.GlobalRM")
    msg = rm.Open("USB0::0x0B3E::0x1050::00000001::INSTR", AccessMode.NO_LOCK, 0, "")

    'Example: GPIB
    'msg = rm.Open("GPIB0::1::INSTR", AccessMode.NO_LOCK, 0, "")
    'Example: Using an VISA alias
    'msg = rm.Open("MYDEV1", AccessMode.NO_LOCK, 0, "")
    'Example: LAN(SCPI-RAW)
    'msg = rm.Open("TCPIP::169.254.7.8::5025::SOCKET", AccessMode.NO_LOCK, 0, "")

    msg.TerminationCharacterEnabled = True
  End Sub

  'Query the instrument identity
  Private Sub Button1_Click(ByVal sender As System.Object, ByVal e As System.EventArgs) Handles Button1.Click
    msg.WriteString("*IDN?" & vbLf)
    TextBox1.Text = msg.ReadString(256)
  End Sub

  'Set the voltage and frequency
  Private Sub Button2_Click(ByVal sender As System.Object, ByVal e As System.EventArgs) Handles Button2.Click
    msg.WriteString("OUTP 0" & vbLf)
    msg.WriteString("VOLT 110" & vbLf)
    msg.WriteString("FREQ 60" & vbLf)
    msg.WriteString("OUTP 1" & vbLf)
  End Sub
```

```
    'Querys measurement DC voltage
    Private Sub Button3_Click(ByVal sender As System.Object, ByVal e As System.EventArgs) Handles Button3.Click
        msg.WriteString("MEAS:VOLT:DC?" & vbLf)
        TextBox1.Text = msg.ReadString(256)
    End Sub

    Private Sub Form1_Disposed(ByVal sender As Object, ByVal e As System.EventArgs) Handles Me.Disposed
        msg.Close()
    End Sub
End Class
```