KIKUSUI

Part No. IB029762
Mar. 2016

Communication Interface Manual

Regulated DC Power Supply

PAV Series

200W type

PAV10-20 PAV160-1.3
PAV20-10 PAV320-0.65
PAV36-6 PAV650-0.32
PAV60-3.5
PAV100-2

400W type

PAV10-40 PAV160-2.6
PAV20-20 PAV320-1.3
PAV36-12 PAV650-0.64
PAV60-7
PAV100-4

600W type

PAV10-60 PAV160-4
PAV20-30 PAV320-2
PAV36-18 PAV650-1
PAV60-10
PAV100-6

800W type

PAV10-72 PAV160-5
PAV20-40 PAV320-2.5
PAV36-24 PAV650-1.25
PAV60-14
PAV100-8

1. Setup 5
2. Message Reference 21
3. Advanced Output Programmable Function 63
Appendix 75
A. System Error Messages 76
B. Command List 78
C. Voltage and Current Setting Ranges 82
D. Default Settings 84
E. Processing Time of Commands 85
F. PAG Commands 86
G. Installing KI-VISA 93

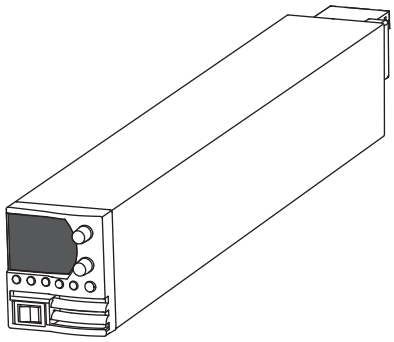

About PAV manual

The manuals are intended for users of the PAV series and their instructors. Explanations are given under the presumption that the reader has knowledge of power supplies.

Manual construction

- Setup Guide
  This guide is intended for first-time users of the product. It gives an overview of the product, connecting procedures, safety precautions, etc. Please read this guide before you operate the product.
- Quick Reference
  The quick reference briefly explains the control panel and the basic operation of it.
- Safety Information
  This document contains general safety precautions for this product. Keep them in mind and make sure to observe them.
- User's Manual (PDF)
  This manual is intended for first-time users of this product. It provides an overview of the product, notes on usage, and specifications. It also explains how to connect the product, configure the product, operate the product, perform maintenance on the product, and so on.
- USB/RS232/RS485 Communication Interface Manual (this manual, PDF)
  This manual explains how to control the product remotely using SCPI commands.
  The interface manual is written for readers with sufficient basic knowledge of how to control measuring instruments using a PC.
- LAN Interface Manual (PDF)
  This manual explains how to control the product remotely for users of the PAV series with the optional LAN interface.
  The interface manual is written for readers with sufficient basic knowledge of how to control measuring instruments using a PC.

You can download the most recent version of these manuals from the Kikusui Electronics Corporation website (http://www.kikusui.co.jp/en/download/).

You can view the PDF files using Adobe Reader 10 or later.

Before reading this manual

First read the User's Manual, which includes information on the product's hardware, to avoid connecting or operating the product incorrectly.

Trademarks

Microsoft and Windows are registered trademarks or trademarks of Microsoft Corporation in the United States and/or other countries.

Other company names and product names used in this manual are generally trademarks or registered trademarks of the respective companies.

Copyrights

Notations used in this manual

- The PAV series is categorized into four types according to the output capacity. This manual contains sections that describe each type separately or several types collectively. The type categories are provided on the front cover.
- The term "PC" is used to refer generally to both personal computers and workstations.
- The following markings are used in the explanations in this manual.

NOTE

Indicates information that you should know.

Contents

About PAV manual 2
Notations used in this manual 2
Contents 3

1 Setup

Construction and Settings 6
Overview of settings 6
Selecting the interface 7
Setting the address 8
Setting the baudrate (RS232/RS485 only) 8
Setting the command language (USB/RS232/RS485 only) 8
Setting remote or local mode 9
RS232/RS485 Ports 10
Connecting to the RS232/RS485 bus .. 10
USB Port 13
USB connection 13
Connecting Several PAVs to a PC 16
Communication Check 18

2 Message Reference

Message Overview 22
Command hierarchy 22
SCPI command syntax 23
Parameter 25
Common Commands 26
*CLS 26
*ESE 26
*ESR 26
*IDN 26
*OPC 27
*OPT? 27
*PSC 27
*RCL 27
*RST 27
*SAV 28
*SRE 28
*STB 28
*TRG 28
SCPI Subsystem Commands 29
Output subsystem 29
OUTP 29
OUTP:PON 30
OUTP:PROT:CLE 30
OUTP:PROT:FOLD 30
OUTP:PROT:DEL 31
OUTP:ILC:MODE 31
OUTP:TTLT:MODE 32
OUTP:REL 32
OUTP:MODE? 32
Device subsystem 33
INST:COUP 33
INST:NSEL 33
Voltage subsystem 34
VOLT 34
VOLT:TRIG 35
VOLT:PROT:LEV 35
VOLT:PROT:LOW:STAT 36
VOLT:PROT:LOW 36
VOLT:MODE 37
Current subsystem 38
CURR 38
CURR:TRIG 39
CURR:MODE 39
Measurement subsystem 40
MEAS:CURR? 40
MEAS:VOLT? 40
MEAS:POW? 40
Display subsystem 41
DISP:STAT 41
DISP:FLAS 41
Start subsystem 42
INIT 42
INIT:CONT 42
Trigger subsystem 43
TRIGger 43
TRIG:DEL 43
TRIG:SOUR 43
ABOR 43
LIST subsystem 44
LIST:VOLT 44
LIST:CURR 45
LIST:STEP 45
LIST:COUN 45
LIST:DWEL 46
LIST:STOR 46
LIST:LOAD 46
WAVE subsystem 47
WAVE:VOLT 47
WAVE:CURR 48
WAVE:STEP 48
WAVE:COUN 48
WAVE:TIME 49
WAVE:STOR 49
WAVE:LOAD 49
Status subsystem 50
STAT:OPER? 50
STAT:OPER:COND? 50
STAT:OPER:ENAB 50
STAT:QUES? 51
STAT:QUES:COND? 51
STAT:QUES:ENAB 51
System (SYSTem) subsystem 52
SYST:ERR:ENAB 52
SYST:ERR? 52
SYST:LANG 52
SYST:REM 53
SYST:VERS? 53
SYST:DATE? 53
SYST:PON:TIME? 53
Global subsystem 54
GLOB:OUTP:STAT 54
GLOB:VOLT 54
GLOB:CURR 55
GLOB:*SAV 55
GLOB:*RCL 55
GLOB:*RST 55
Status Register and Fault Register 56
Condition register 57

Condition register, enable register, and event register 58
Service request 59
Standard event status group 59

3 Advanced Output Programmable Function

Advanced Output Programmable Function. 64
FIX mode 65
LIST mode 66
WAVE mode 67
Trigger 68
WAVE Mode Sequence Creation Example 71
Creating a sequence 71
Sequence output 72
Reference examples 74

Appendix

A System Error Messages 76
Description 76
List of errors 76
B Command List.....78
Common commands 78
Subsystem commands 78
C Voltage and Current Setting Ranges 82
D Default Settings 84
*RST and factory default settings 84
E Processing Time of Commands 85
F PAG Commands 86
Overview of PAG series communication commands 86
Command categories 88
G Installing KI-VISA 93

Index

Index 95

1

Setup

This chapter provides an overview of the communication interface and its configuration before use.

Construction and Settings

The PAV series can be controlled from a PC through the USB, RS232, or RS485 interface. The main functions are listed below.

- Output voltage setting and query
- Output current setting and query
- Output power query
- Output on/off
- Overvoltage protection setting
- Undervoltage protection setting
- Foldback protection setting
- Status monitor
- Sequence output
- Global commands

Overview of settings

Front panel setup

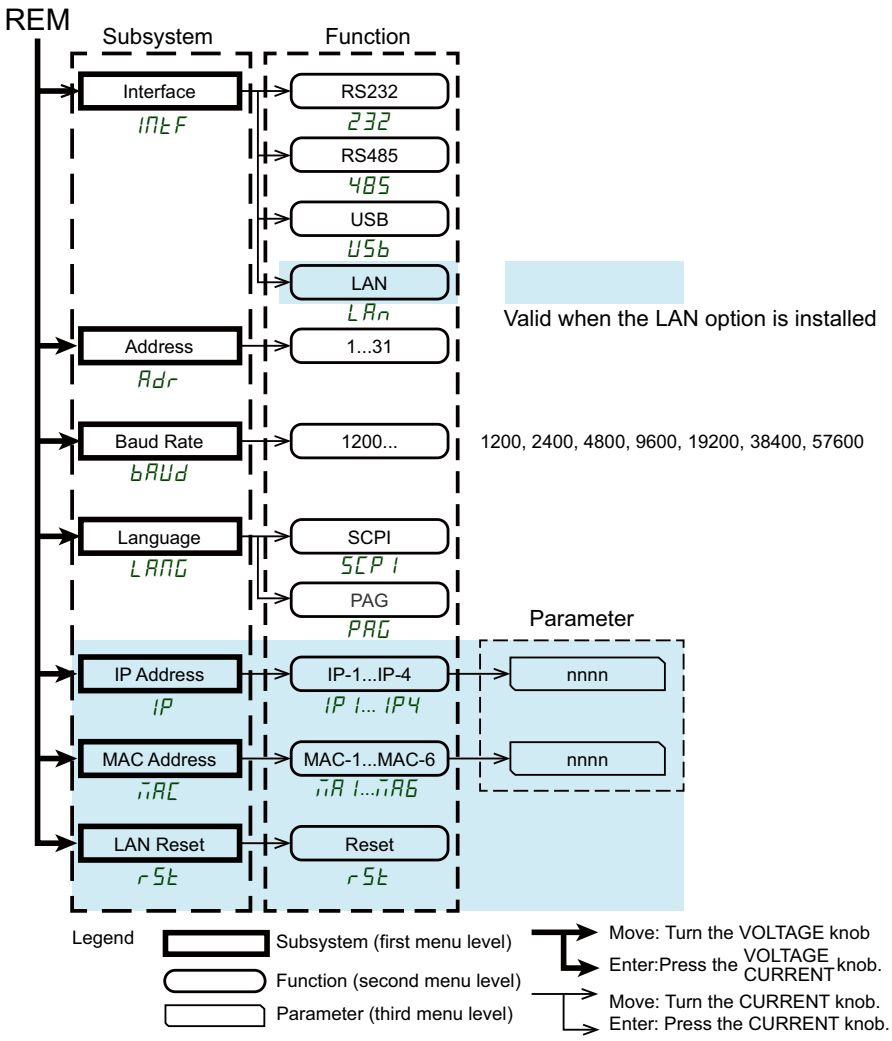

Subsystem and function

The subsystem and function correspond to first and second menu levels. The following items are available.

For the factory default settings and settings after resetting, see “Default Settings” *(p.84)*.

Subsystem Item	Panel display	Function Item	Panel display
interface	INtF	RS232[1]	232
		RS485	485
		USB	USb
		LAN[2]	LAn
Address	Adr	1 to 31 6[1]	1 to 31
Baudrate[3]	bAUd	1200 to 57600 9600[1]	1200 to 576
Command language	LANG	SCPI[1]	SCPI
		PAG[4]	PAG
IP address[5]	IP	IP1 to IP4	IP1 to IP4
MAC address[5]	MAC	MAC1 to MAC6	MA1 to MA6
LAN reset[5]	rSt	Reset	rSt

1 Factory default setting
2 Valid when the LAN option is installed
3 The setting is valid when RS232/RS485 is selected.
4 PAG series communication commands, cannot be used when the LAN interface is selected
5 Displayed on models with LAN installed when LAN is selected

Parameter

The third menu level. There are parameter items according to each function.

Selecting the interface

You can select USB, RS232, RS485, or LAN option for the communication interface.

1 Press REM.

The REM LED lights, and the voltmeter shows “ INtF.”

2 Press the VOLTAGE knob.

The voltmeter shows “ INtF,” and the ammeter shows the communication interface name.

3 Turn the CURRENT knob to select the communication interface.

The available communication interface names are “232,” “485,” “USb,” and “LAn.” “LAn” is available when the LAN option is installed.

4 Press the CURRENT knob.

When the interface is set, the display blinks and returns to the original screen.

Setting the address

You can set the PAV series address between 1 and 31. Be careful to assign unique addresses when using several units.

1 **Press REM.**
The REM LED lights. The voltmeter shows " INtF," and the ammeter shows "Adr."

2 **Press the CURRENT knob.**
The voltmeter shows "Adr." The ammeter shows the address.

3 **Turn the CURRENT knob to select the address.**

4 **Press the CURRENT knob.**
When the address is set, the display blinks and returns to the original screen.

Setting the baudrate (RS232/RS485 only)

You can select from seven available baudrates: 1200, 2400, 4800, 9600, 19200, 38400, 57600. When you connect several PAV series power supplies through RS485, be sure to set the same baudrate on each PAV.

1 **Press REM.**
The REM LED lights, and the voltmeter shows " INtF."

2 **Turn the VOLTAGE knob until the voltmeter shows "bAUd."**

3 **Press the VOLTAGE knob.**
The ammeter shows the baudrate.

4 **Turn the CURRENT knob to select the baudrate.**

5 **Press the CURRENT knob.**
When the baudrate is set, the display blinks and returns to the original screen.

Setting the command language (USB/RS232/RS485 only)

For the command language, you can use the SCPI standard language or the PAG commands (commands used on Kikusui's PAG series).

The PAG command cannot be used on the LAN interface.

1 **Press REM.**
The REM LED lights, and the voltmeter shows " INtF."

2 **Turn the VOLTAGE knob until the voltmeter shows "LANG."**

3 **Press the VOLTAGE knob.**

The voltmeter shows "LANG," and the ammeter shows the command language.

4 **Turn the CURRENT knob to select the command language.**

5 **Press the CURRENT knob.**

When the command language is set, the display blinks and returns to the original screen.

Setting remote or local mode

- **Local mode**

The PAV series can receive queries and commands in local mode. When a query (PAV operating status query) is received, the PAV returns a response and remains in local mode. Even when the PAV is in local mode, it is possible to write to status registers and send readout commands. If an enable register is set, the PAV sends an SRQ (service request) even when in local mode.

- **Remote mode**

When a command (modification or execution command for PAV output, operation, etc.) is received, the PAV series executes the command and switches to remote mode.

- Command for switching to remote mode

Command language	Command
SCPI	**SYSTem:REMote[:STAte]REM/1**
PAG	**RMT 1**

In remote mode, the REM LED lights, and parameters cannot be changed from the front panel. To return to local mode, press REM or send the appropriate command (through the serial port).

- Command for returning to local mode

Command language	Command
SCPI	**SYSTem:REMote[:STAte]LOC/0**
PAG	**RMT 0**

- **Local lockout mode**

In local lockout mode, the REM LED lights, and parameters cannot be changed from the front panel. You can return to remote mode from this mode by sending an appropriate command (through the serial port) or by turning off the POWER switch, waiting for the display to turn off, and turning the POWER switch back on.

- Command for switching to local lockout mode

Command language	Command
SCPI	**SYSTem:REMote[:STAte]LLO/2**
PAG	**RMT 2**

RS232/RS485 Ports

The rear panel has an RS232/RS485 J4-IN (input) port and a RS485 J4-OUT (output) port. The port is 8-pin RJ-45. The IN and OUT ports are used to connect the PAV series power supplies in a daisy chain to a PC through RS232 or RS485.

The following figure shows the pin arrangements. TX and RX are used from RS232 communication, TXD+/- and RXD+/- are used for RS485 communication.

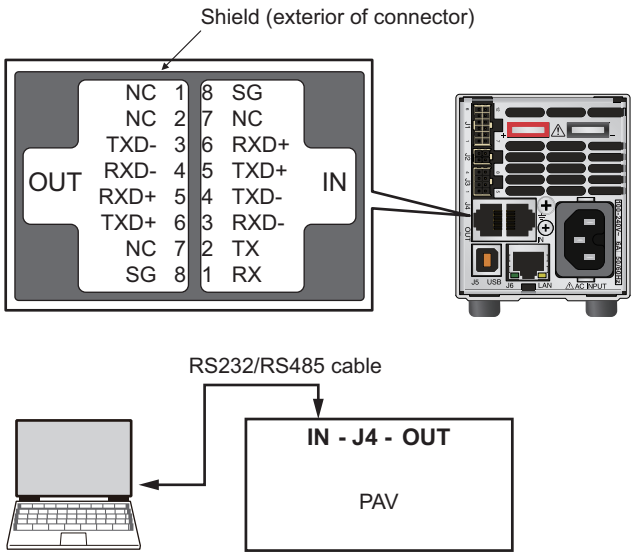

Connecting to the RS232/RS485 bus

Use an appropriate shielded cable to connect the rear panel J4-IN port to the controller's (PC's) RS232 or RS485 port.

Three types of cables (options) are available.

Set the port on the PC as follows.

- Baudrate[1]: 1200, 2400, 4800, 9600, 19200, 38400, or 57600
- Data bits: 8
- Parity: None
- Stop bits: 1
- Flow control: None

[1] Set the same baudrate as with the PAV.

RS232 cable with Dsub 9-pin and RJ-45 connectors (option model: PAG/232-9)

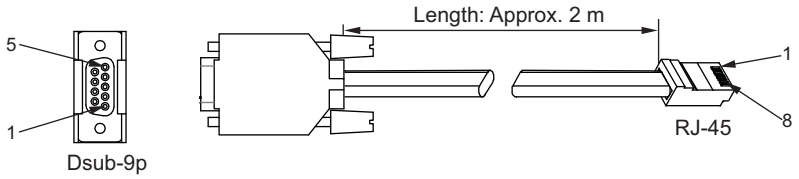

Dsub connector		RJ-45 connector		Note
Pin no.	Name	Pin no.	Name	
Housing	Shield	Housing	Shield	-
2	RX	2	TX	Twisted pair wires
3	TX	1	RX	
5	SG	8	SG	-

RS485 cable with Dsub 9-pin and RJ-45 connectors (option model: PAG/485-9)

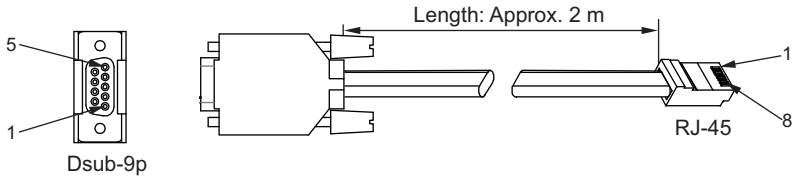

Dsub connector		RJ-45 connector		Note
Pin no.	Name	Pin no.	Name	
Housing	Shield	Housing	Shield	-
9	TXD-	3	RXD-	Twisted pair wires
8	RXD+	6	TXD+	
1	SG	8	SG	-
5	RXD-	4	TXD-	Twisted pair wires
4	RXD+	5	TXD+	

RS232 cable with a Dsub 25-pin and RJ-45 connectors (option model: PAG/232-25)

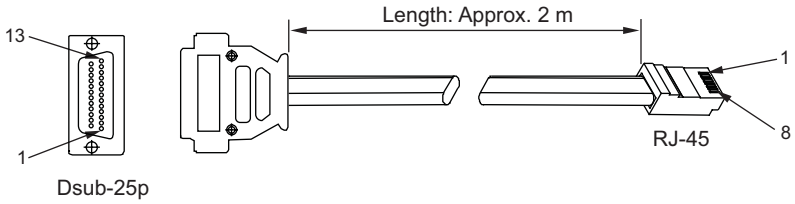

Dsub connector		RJ-45 connector		Note
Pin no.	Name	Pin no.	Name	
1	Shield	Housing	Shield	-
2	TX	1	RX	Twisted pair wires
3	RX	2	TX	
7	SG	8	SG	-

USB Port

The rear panel has a USB port.

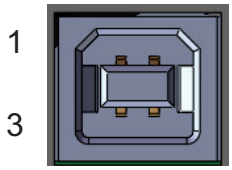

USB port Type B

Pin no.	Symbol	Name
1	VBUS	+5 Vdc
2	D-	DATA-
3	D+	DATA+
4	GND	IFC COM

USB connection

To use USB, USB driver needs to be installed on your PC.

1 **Put the included CD-ROM into the PC's CD-ROM drive.**

In a few moments, a start window will appear. If the start window does not appear, open the CD-ROM folder in Windows Explorer, and then double-click index.html to display the start window.

2 **Click USB drivers.**

Self-extracting compressed files appear.

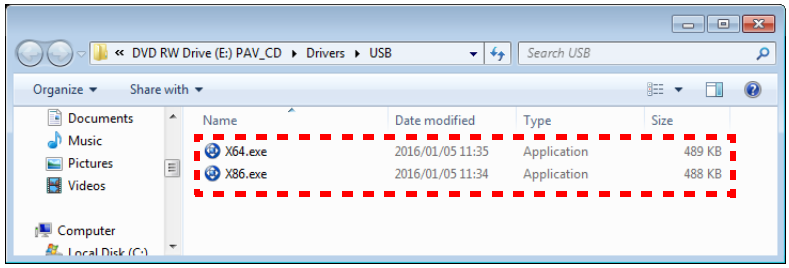

3 **On a 64-bit OS, drag X64.exe to the desktop to copy it. On a 32-bit OS, drag X86.exe.**

4 **Run X64.exe or X86.exe to decompress the file on the desktop.**

5 **Open the decompressed X64 or X86 folder.**

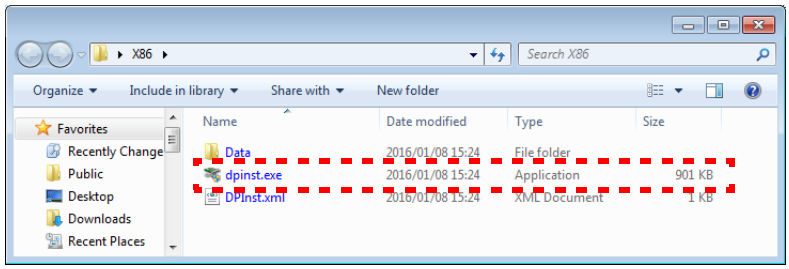

6 **Run dpinst.exe.**

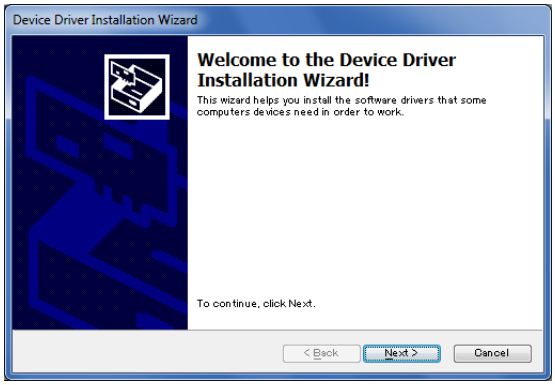

7 **Follow the instructions until the installation is complete.**

When the installation is complete, the following dialog box appears.

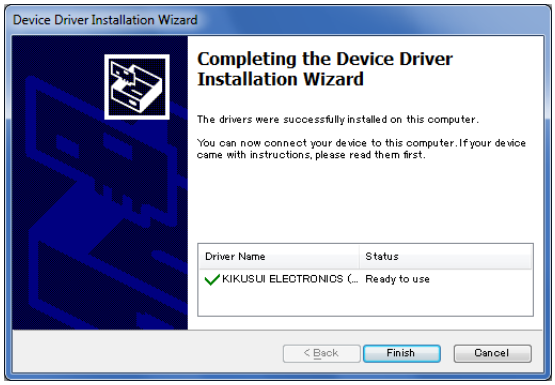

8 **Click Finish.**

9 **Check that the POWER switch is turned off.**

10 **Connect between the PAV and PC USB ports with a cable.**

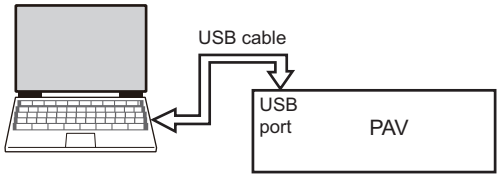

The connector on the PAV side of the USB cable needs to be type B. Please provide your own USB cable.

11 **Turn the POWER switch on.**

12 Check the COM port connection using Device Manager.

A PAV connected to the PC's USB port is handled as though it is connected to the COM (RS232) port by the installed USB driver. As such, when you view the connection on Device Manager, the PAV appears under COM port. Even though it is connected the COM port, there is no need to set the baudrate or other communication protocol settings.

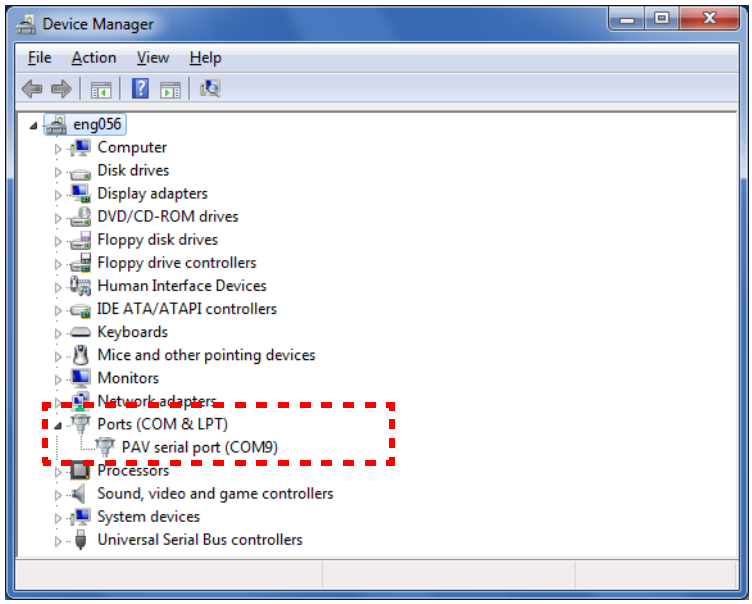

NOTE If USB communication fails, remove the USB cable from the PC once, and perform steps 9 to 12.

Connecting Several PAVs to a PC

Up to 31 PAV series power supplies can be connected to a PC through an RS232, RS485, or USB bus. Connect the first PAV to the controller (PC) through RS232, RS485, or USB. Connect the other PAVs through RS485.

When you connect several PAV series power supplies through RS485, be sure to assign unique addresses to each PAV and to set the same baudrate on each PAV.

Use the supplied RS485 link cables (PAG/RJ45) to connect between PAVs.

1 **Connect the first PAV to the PC's interface port with a cable.**

For RS232, use the J4-IN port.

For USB, use the J5-USB port.

2 **Using the supplied RS485 link cables, connect the J4-OUT port of each PAV to the J4-IN port of the next PAV.**

Connecting several PAVs to the RS232/RS485 bus

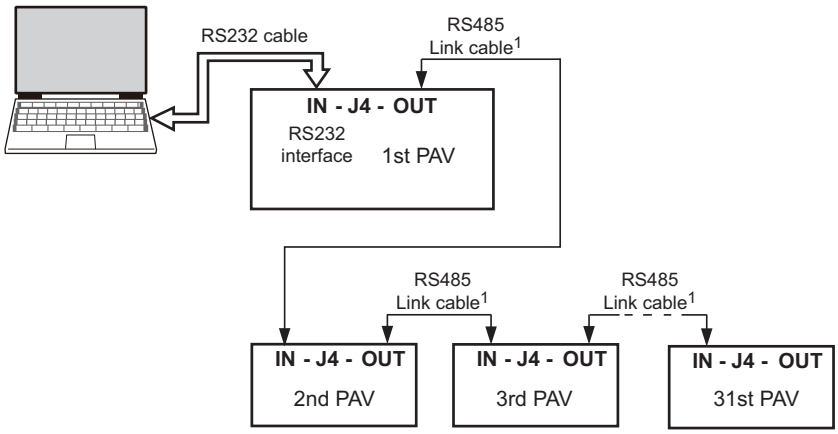

[1] Supplied with each PAV.

Connecting several PAVs to the USB/RS485 bus

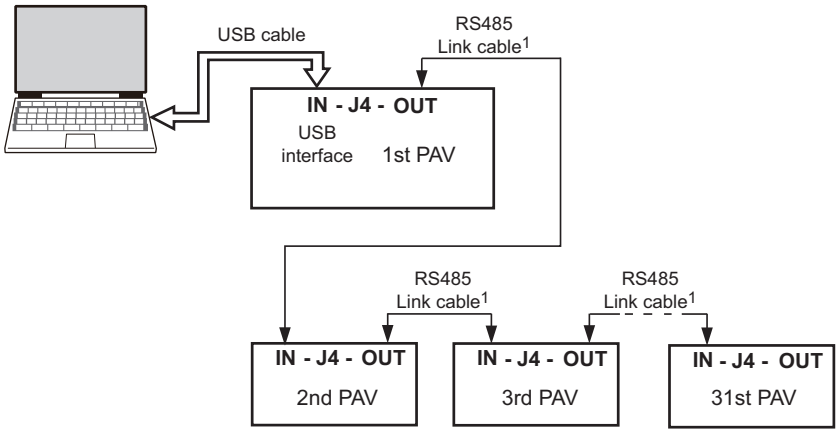

[1] Supplied with each PAV.

Serial link cable with shielded connectors (model name: PAG/RJ45)

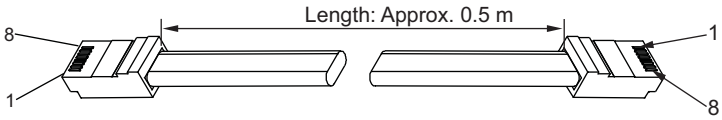

RJ-45 connector		RJ-45 connector		Note
Pin no.	Name	Pin no.	Name	
Housing	Shield	Housing	Shield	-
8	SG	8	SG	-
3	TXD-	3	RXD-	Twisted pair wires
6	RXD+	6	RXD+	
4	RXD-	4	TXD-	Twisted pair wires
5	RXD+	5	TXD+	

Communication Check

This section describes how to connect the PAV to the PC through USB and check the establishment of communication using KI-VISA Instrument Explorer.

Communication tool KI-VISA Instrument Explorer is installed by installing KI-VISA from the supplied CD.

1 **Install KI-VISA in the PC.**

For details on installation, see appendix F, “Installing KI-VISA” (p.93).

2 **Select USB according to “Selecting the interface” *(p.7)*.**

3 **Set the address to 6 according to “Setting the address” *(p.8)*.**

The factory default setting is 6.

4 **Select SCPI according to “Setting the command language (USB/RS232/RS485 only)” *(p.8)*.**

5 **Connect the PAV to the PC according to “USB connection” *(p.13)*.**

If the PAV USB driver is already installed in the PC, start from step 9 in “USB connection” (p.13).

6 **Click All Programs, Kikusui IO Software, KI-VISA, and then Instrument Explorer.**

The connected devices appear in the left pane.

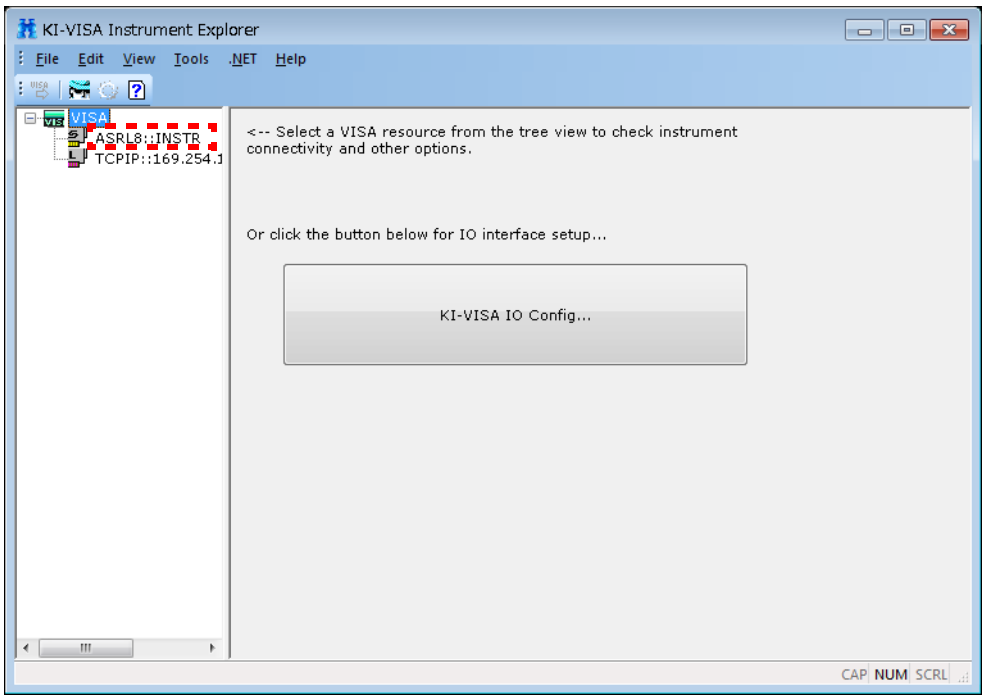

Devices connected through the serial port are displayed as ASRL<COM port number>::INSTR.

Since the PAV series uses a COM port even with a USB connection, it is displayed as ASRL<COM port number>::INSTR.

The COM port that the PAV series is using can be verified in step 8 of “USB connection.” In the screen capture above, port 8 is being used.

7 Click “ASRL<COM port number>::INSTR.”

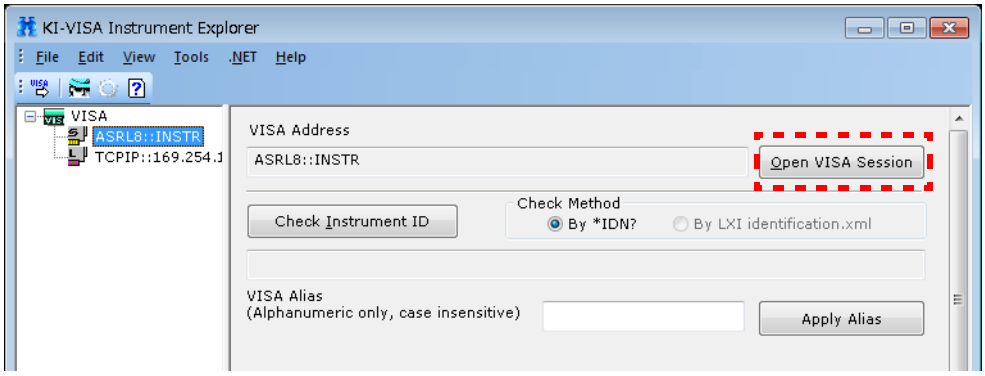

8 Click the Open VISA Session button.

Another window opens.

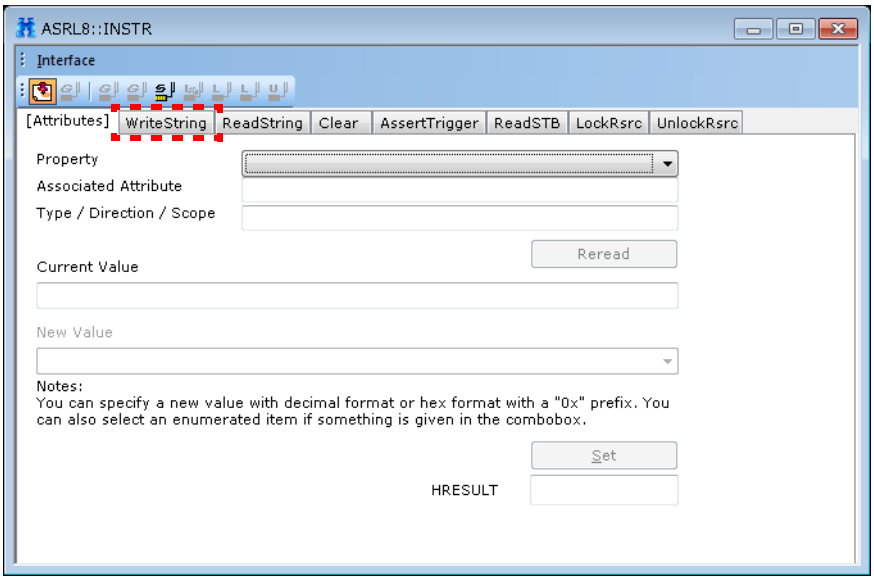

9 Click the WriteString tab.

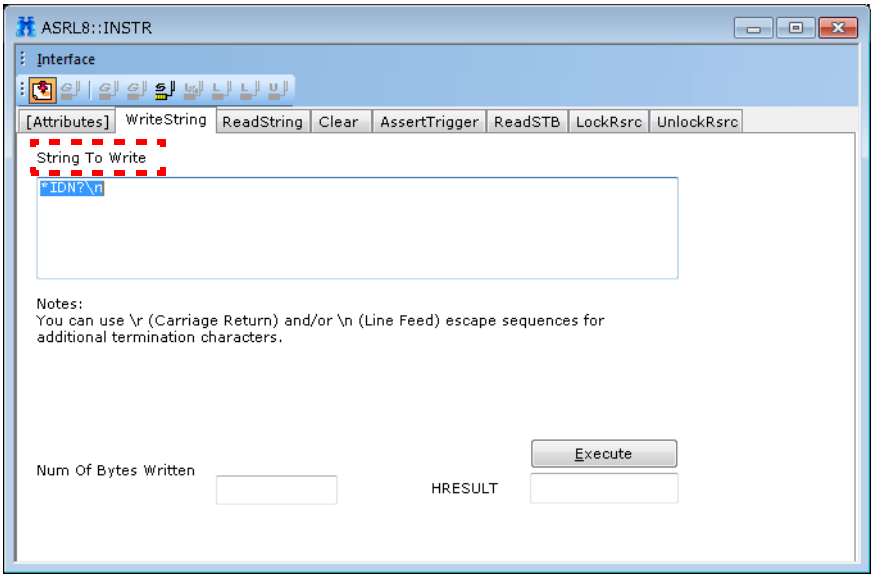

10 Type the following in the String To Write box, and click Execute.

INST:NSEL 6;*IDN?\r\n

For “INST:NSEL,” enter address 6, which was set in step 3.

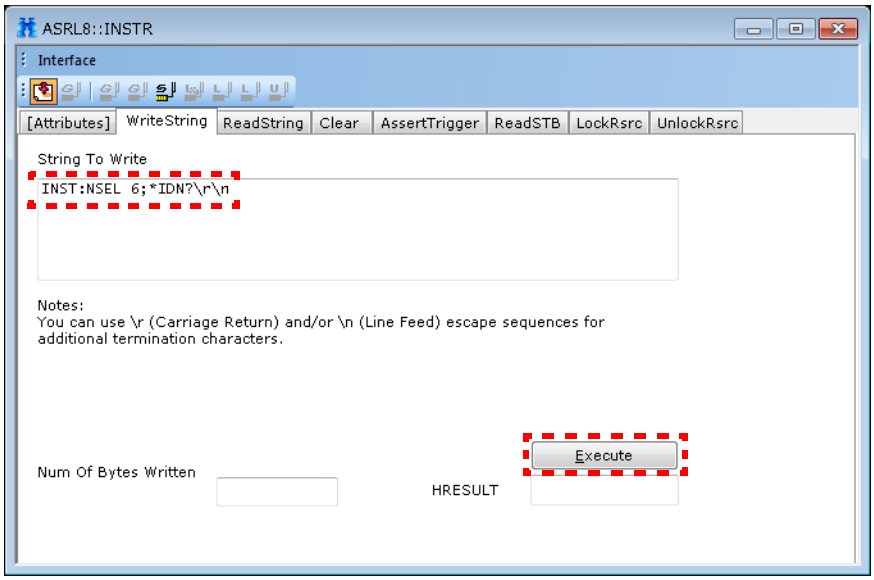

11 Click the ReadString tab, and click Execute.

If the information of the connected PAV is shown in the String Read box, the communication is established.

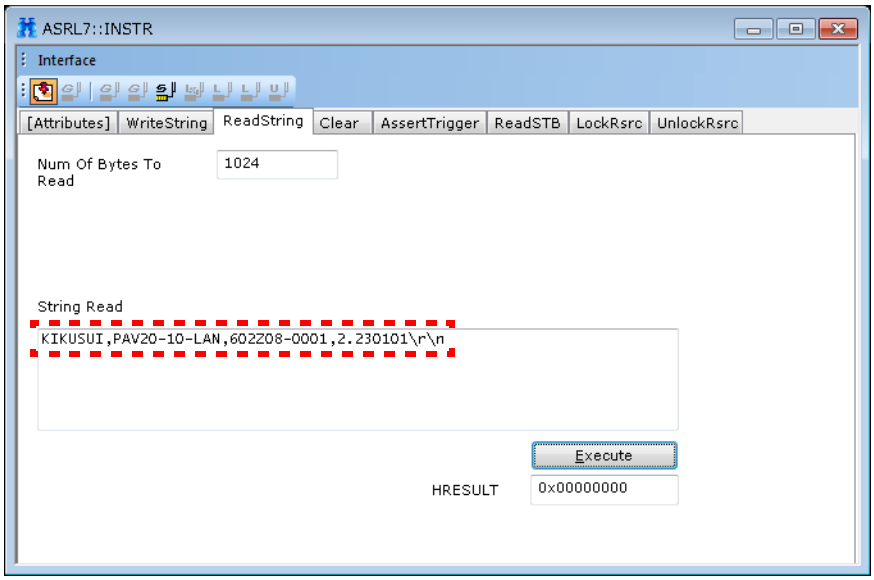

Otherwise, a code is displayed in red in the HRESULT box.

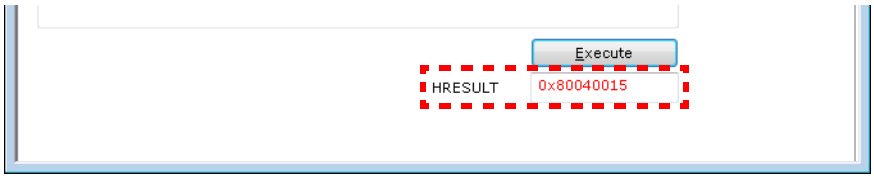

2

Message Reference

This chapter explains SCPI commands and status registers.

Message Overview

The information that is transferred between the controller (the PC) and the PAV series is referred to as *messages*.

The PAV series can use two different languages for messages: SCPI language and Kikusui's PAG series language.

There are two types of messages: commands, which the controller sends to the PAV, and responses, which the PAV sends to the controller.

NOTE

Set an appropriate wait time for exchanging messages. If a wait time is not set, communication errors may occur.

Command hierarchy

SCPI is an ASCII-based command language that was designed for test and measuring equipment. The command structure is composed of the common roots and nodes that are the building blocks of the SCPI subsystem. A command consists of a program header, parameters, and punctuation marks.

The following table uses the OUTPut subsystem as an example to explain the hierarchy.

Program header	Parameter	Node level
OUTPut:		Root node
[:STATe]	<bool>	2nd level
:PON		2nd level
[:STATe]	<bool>	3rd level
:PROTection		2nd level
:CLEar		3rd level
:FOLDback		3rd level
[:MODE]	<CRD>	4th level

A colon (:) separates a higher node from a lower node.

SCPI command syntax

Command syntax

In this manual, SCPI commands are expressed in the following format.

Ex:

[SOURce:]CURRent[:LEVel][:IMMediate][:AMPLitude] <NRf+>

- SCPI commands can be written in long form (with all the characters) or in short form (omitting the lowercase characters).

  SCPI commands can be transmitted in either long form or short form.
- SCPI commands are not case sensitive. CURR, Curr, and curr are all received as the short form of the CURRent command.

  CURRENT, Current, and current are all received as the long form.
- A space separates a program header and its parameters.
- Multiple parameters are separated by commas.
- Compound commands can be created by concatenating two commands with a semicolon.

  Example:

  SOURce:CURRent 15.77;VOLTage 3.25

  You can use a compound command to send a command that is the same as the two following commands.

  SOURce:CURRent 15.77
  SOURce:VOLTage 3.25

  In the first command, SOURce:CURRent 15.77, the path is set to SOURce. Therefore, in the second command, the root node SOURce can be omitted.

  If you specify a node that is not defined in the current path (except for CURRent and VOLTage), an error will occur.
- Program headers are separated by colons.
- By using colons and semicolons, you can concatenate commands of different subsystems.

  Example:

  SOURce:CURRent 15.77;:MEASure:CURRent?

  There are two root nodes in this compound command: SOURce and MEASure.

  When the second command or later begins with a colon, the path that was specified by the previous command is cleared.

Special symbols

The special symbols that are used in this manual for the SCPI command syntax are explained below.

Symbol or character	Definition
< >	Character strings inside the < and > symbols indicate program data. Do not include the < and > symbols in the actual program.
{ }	Characters and numbers delimited by “|” inside the { and } symbols indicate that one of the delimited items is to be selected. Do not include the { and } symbols in the actual program.
[ ]	Character strings inside [and] indicate optional data. When optional data is not sent with the program, the default value is sent. Do not include the [and] symbols in the actual program.

Queries

You can query the device settings and status.

To make a query, append a question mark to the end of the program header section.

If the query has parameters, insert a space after the question mark, and then write the parameters.

Example:
`CURRent? MIN`

NOTE If you want to send two queries on separate lines, send the second query after you have received the response to the first one. If you send query commands on two lines at the same time, you may receive an incomplete response.

Terminating character strings

All commands must be terminated with a valid terminator.

Use CR (0x0D) + LF (0x0A) for the terminator.

Checksum

A checksum can be added to the end of command strings. The checksum is expressed using a 2-digit hexadecimal after a dollar symbol. If a checksum is included in an execution command or query command, a checksum is also included at the end of its response message.

Do not insert a carriage return <CR> character between the command string and the dollar symbol.

Common commands

There are commands that are common to the IEEE-488.2 and SCPI standards for functions such as resetting devices and performing self-diagnoses. These common commands start with an asterisk (“*”). These commands may have one or multiple parameters.

Parameter

The SCPI parameter format is derived from the program parameter format that is defined in IEEE 488.2.

The program data expression format that the PAV series uses is shown below.

Non-numeric parameters

Symbol or character	Description
Character data <CRD>	Used when only a limited number of values are available for a program setting. Responses are returned in short form. Ex: `OUTPut:TTLTrg:MODE {TRIG|FSTR|OFF}`
Boolean data <Bool>	Used to express a condition of 1 or 0, or ON or OFF. Responses are returned as 1 or 0. Ex: `OUTPut[:STATe] {ON|OFF|1|0}`

Numeric parameters

Symbol or character	Description
NR1	Represents an integer value.[1] Ex: 256
NR2	Represents a real number in floating-point format.[1] Ex: 0253
NR3	Represents a real number in scientific notation.[1] Ex: 2.73E+2
NRf	NRf is a generic term that includes NR1, NR2, and NR3. Ex: 273 273.1 2.73E2
NRf+	Represents values such as the decimal point, optional prefixes, and measurement units. Numbers are expressed the same as NRf. MINimum, MAXimum, and the like are available as substitutes for declaring certain values. Ex: 273,273.1 2.73E2,MAX

1 Details are given in the “IEEE 488.2 Standard Digital Interface for Programmable Instrumentation.”

Common Commands

*CLS

Clears all status structures.

The command execution time is 150 ms.

Command `*CLS`

*ESE

Changes the content of the event status enable register *(p.59)*.

Command
```
*ESE <NR1>
*ESE?
```

Parameter <NR1> is a decimal number (0 to 255) indicating the sum of the enabled bits.

Ex:

`*ESE 74`

Response Returns a decimal number (0 to 255) indicating the sum of the enabled bits in response to *ESE?.

*ESR

Reads the event status register value.

Command `*ESR?`

Response Returns a decimal number (0 to 255) indicating the sum of the enabled bits in response to *ESR?.

*IDN

Reads the manufacturer name, model, serial number, and firmware version.

Command `*IDN?`

Response Returns the following information in response to *IDN?.

Manufacturer name, model, <rated voltage>-<rated current>-LAN[*1], <serial number>, version <main firmware>

*1 Only for PAV series with the optional LAN interface

*OPC

Sets the OPC bit (bit 0) of the event status register when the processing of all commands is complete.

Command `*OPC`
`*OPC?`

Response Returns “1” when the processing of all commands is complete in response to *OPC?.

*OPT?

Queries the installed options.

Command `*OPT?`

Response Returns an integer corresponding to the installed option.
0 (none), 2 (LAN)

*PSC

Controls the auto register reset at startup. The applicable registers are the service request enable register, standard event status enable register, and device event enable register.

- ON (1): The above registers are cleared (reset) at startup.
- OFF (0): The above registers are not cleared (reset) at startup. Registers retain their startup states.

Command `*PSC <Bool>`
`*PSC?`

Parameter 0 | 1 | OFF | ON

Ex:
`*PSC 0 *PSC 1`

Response Returns “0” or “1” in response to *PSC?.

*RCL

Returns to the condition that was saved with the *SAV command *(p.28)*.

Command `*RCL <NR1>`

Parameter 1 to 4

*RST

Resets memory parameters *(p.84)*. RST forcibly executes the ABORt command *(p.43)*.

Command `*RST`

*SAV

Saves the operating status (memory parameters) to memory.

Command `*SAV <NR1>`

Parameter 1 to 4

*SRE

Changes the content of the service request enable register.

Command `*SRE <NR1>`
`*SRE?`

Parameter <NR1> is a decimal number (0 to 255) indicating the sum of the enabled bits.

Ex:

`*SRE 20`

Response Returns a decimal number (0 to 255) indicating the sum of the enabled bits in response to *SRE?.

*STB

Queries the contents of the status byte register and the MSS (master summary status) message.

The response is the same as serial polling only with the exception that the MSS message appears in place of the RQS message in bit 6.

Command `*STB?`

Response Returns the value of the status byte register and the MSS message (bit 6) in NR1 format.

*TRG

When the trigger source is set to “BUS,” the trigger command starts the output.

Command `*TRG`

SCPI Subsystem Commands

Output subsystem

Command hierarchy

OUTPut			
	[:STATe] <bool>		Sets the output on/off state.
	:PON		
		[:STATe] <bool>	Sets the startup mode after the application of input voltage to safe start or auto start.
	:PROTection		
		:CLEar	Releases activated protection functions (OVP, UVP, FOLD).
		:FOLDback	
		[:MODE] <CRD>	Detects switching of the operation mode (between CC and CV) and shuts off the output.
		:DELay <NRf+>	Sets the delay time for activating protection circuits.
	:ILC		
		:MODE <bool>	Enables or disables the output on/off control.
	:TTLTrg		
		:MODE <CRD>	Sets the output trigger signal.
	:RELay {1|2}		
		[:STATe] <bool>	Controls the J3 connector's open collector output.
	:MODE?		Returns the present operation mode (CV/CC/OFF).

OUTP

Set the output to on or off. When the output is off, the voltmeter shows "OFF."

Command

```
OUTPut[:STATe] <bool>
OUTPut[:STATe]?
```

Parameter

Values:		
	ON (1)	Output on
	OFF (0)	Output off

Ex:

```
OUTPut 1
OUTP:STAT ON
```

Response Returns 1 if the output is on or 0 if the output is off in response to OUTP:STAT?.

OUTP:PON

In safe start mode, the output is always off when the POWER switch is turned on.

In auto start mode, the output is in the state that it was in immediately before the AC input was turned off when the POWER switch is turned on.

Sets the start mode (safe or auto).

Command

```
OUTPut:PON[:STATe] <bool>
OUTPut:PON[:STATe]?
```

Parameter

Values:		
	ON (1)	Auto start mode (AUTO)
	OFF (0)	Safe start mode (SAFE)

Ex:

```
OUTP:PON 1
```

Response Returns 1 if the output is on or 0 if the output is off in response to OUTP:PON:STAT?.

OUTP:PROT:CLE

Releases the output shutoff state that resulted from overvoltage protection (OVP), undervoltage protection (UVP), or foldback protection (FOLD).

Before releasing the output shutoff state, eliminate the condition that caused the protection to be activated. This will return the PAV series to the state it was in before the protection function was activated.

Command

```
OUTPut:PROTection:CLEar
```

OUTP:PROT:FOLD

Sets the foldback protection.

NOTE If the foldback protection is activated when the output is turned on, the operation mode at power-on and the foldback protection are set to the same value. Change the foldback protection setting.

Command

```
OUTPut:PROT:FOLDback[:MODE] <CRD>
OUTPut:PROT:FOLDback[:MODE]?
```

Parameter

Values:		
	OFF (0)	Not activated regardless of the transition between constant voltage mode and constant current mode
	CC (1)	Activated when a transition is made from constant voltage mode to constant current mode
	CV (2)	Activated when a transition is made from constant current mode to constant voltage mode

Ex:

```
OUTP:PROT:FOLD:MODE CC
```

Response Returns the present mode in CRD format in response to OUTP:PROT:FOLD:MODE?.

OUTP:PROT:DEL

For Under voltage protection (UVP) and foldback protection, you can set a delay time between detection and activation (output shutoff). The delay time is determined by the following equation.

- UVP delay time = 500 ms + delay setting (0 s to25.5 s)
- Foldback protection delay time = Tfb + delay setting (0 s to25.5 s)

Rated output voltage	10 V	20 V	36 V	60 V	100 V	160 V	320 V	650 V
Tfb	0.1 s	0.3 s	0.3 s	0.5 s	0.7 s	1 s	1 s	1.5 s

Command

```
OUTPut:PROT:DELay <NRf+>
OUTPut:PROT:DELay?
```

Parameter

Values:

0* to 25.5	Value setting range (0.1 second steps)
MIN	Minimum value*
MAX	Maximum value

Unit: S

*Because setting the value to 0 will turn the delay off, OUTP:PROT:DEL MIN will set the minimum delay time of 0.1 seconds.

Ex:

```
OUTP:PROT:DEL 12.5
OUTP:PROT:DEL 2E-1
```

Response Returns the present delay time in NR3 format in response to OUTP:PROT:FDEL?.

OUTP:ILC:MODE

Sets whether to allow the output to be turned on and off using a control signal applied to the rear panel J3 connector (J3-4 terminal).

Command

```
OUTPut:ILC:MODE <bool>
OUTPut:ILC:MODE?
```

Parameter

Values:

ON (1)	Allow
OFF (0)	Prohibit

Ex:

```
OUTP:ILC:MODE ON
```

Response Returns 1 if turning the output on and off is allowed or zero if it is not in response to OUTP:ILC:MODE?.

OUTP:TTLT:MODE

Sets the condition for outputting trigger signals *(p.70)* from the rear panel J3 connector (J3-3 terminal).

Command

```
OUTPut:TTLTrg:MODE <CRD>
OUTPut:TTLTrg:MODE?
```

Parameter Values: TRIG (trigger)
FSTR (function strobe)
OFF

Output trigger mode	Advanced output programmable function setting	
	NONE or FIX	LIST or WAVE
TRIG (trigger)	A trigger signal is output whenever the output status changes.	A trigger signal is output when a LIST or WAVE action is complete.
FSTR (function strobe)	A trigger signal is automatically output whenever the output parameter (voltage, current) is changed.	A trigger signal is automatically output whenever a step process is complete.
OFF	No trigger output	No trigger output

Ex:

```
OUTP:TTLT:MODE TRIG
```

Response Returns the present mode (TRIG, FSTR, or OFF) in response to OUTP:TTLT:MODE?.

OUTP:REL

Controls the general-purpose signal output (J3-1 and J3-6 terminals) of the rear panel J3 connector.

Command J3-1 terminal (Aux Pin1)

```
OUTPut:RELay1[:STATe] <bool>
OUTPut:RELay1[:STATe]?
```

J3-6 terminal (Aux Pin2)

```
OUTPut:RELay2[:STATe] <bool>
OUTPut:RELay2[:STATe]?
```

Parameter Values: 1 (ON) Signal output on (low level)
0 (OFF) Signal output off

Ex:

```
OUTP:REL1 1
```

Response Returns 1 if the J3-1 terminal's signal output is on or 0 if the output is off in response to OUTP:REL1?.
Returns 1 if the J3-6 terminal's signal output is on or 0 if the output is off in response to OUTP:REL2?.

OUTP:MODE?

Queries the operation mode (CV/CC).

Command

```
OUTPut:MODE?
```

Response Returns CV or CC when the output is on in response to OUTP:MODE?. Returns OFF if the output is off.

Device subsystem

Command hierarchy

INSTrument		
	COUPle <CRD>	Specifies all the connected PAVs.
	NSELect <NR1>	Specifies a single PAV.

INST:COUP

Sets the communication target to all PAVs.

Command **INSTrument:COUPle <CRD>**

Parameter Values: ALL Selects all
NONE Selects individually

Ex:

INST:COUP ALL

INST:NSEL

Selects the address of a single PAV to communicate with. The target device number <NR1> is between 1 and 31.

Command **INSTrument:NSELect <NR1>**
INSTrument:NSELect?

Parameter Values: 1 to 31 Address

Ex:

INST:NSEL 6

Response Returns the target device address in NR1 format in response to INST:NSEL?.

Voltage subsystem

Command hierarchy

[SOURce:]VOLTage			
	[:LEVel]		
		[:IMMediate]	
			[:AMPLitude] <NRf+> — Sets the output voltage.
		:TRIGger <NRf+>	Sets the trigger voltage.
	:PROTection		
		:LEVel <NRf+>	Sets the OVP.
		:LOW	
			:STATe <CRD> — Selects OVP|UVL mode.
			[:LEVel] <NRf+> — Sets the UVP|UVL value.
	:MODE <CRD>		Selects the advanced output programmable function mode.

VOLT

Sets the output voltage.

Command

```
[SOURce:]VOLTage[:LEVel][:IMMediate][:AMPLitude] <NRf+>
[SOURce:]VOLTage[:LEVel][:IMMediate][:AMPLitude]?
```

Parameter

Values:

Voltage setting range*	The maximum number of characters that can be entered is 12 (including the decimal point).
MIN	Minimum value
MAX	Maximum value

Unit: V

* See “Voltage and Current Setting Ranges” *(p.82)* in the appendix.

NOTE

The voltage can be set 5 % higher than the maximum value in the setting range, but avoid setting it above the maximum value. Use exceeding the ratings is outside the guaranteed range.

Ex:

```
VOLT 500 MV
VOLT:LEV 234.56789
VOLT? MAX
VOLT? MIN
```

Response

Returns the voltage in NR3 format as follows.
The present voltage in response to VOLT?
The minimum voltage that can be set in response to VOLT? MIN
The maximum voltage that can be set in response to VOLT? MAX**

**105% of the rated output voltage or OVP value÷1.05, whichever is less

VOLT:TRIG

Sets the voltage (trigger voltage) to output after receiving a trigger signal.

Command

```
[SOURce:]VOLTage[:LEVel]:TRIGgered[:AMPLitude] <NRf+>
[SOURce:]VOLTage[:LEVel]:TRIGgered[:AMPLitude]?
```

Parameter

Values:	Same as VOLT *(p.82)*	The maximum number of characters that can be entered is 12 (including the decimal point).
	MIN	Minimum value
	MAX	Maximum value
Unit:	V	

```
VOLT:TRIG 1200 MV
VOLT:TRIG 1.2
VOLT:TRIG? MAX
VOLT:TRIG? MIN
```

Response

Returns the voltage in NR3 format as follows.
The present trigger voltage in response to VOLT:TRIG?
The minimum trigger voltage that can be set in response to VOLT:TRIG? MIN
The maximum trigger voltage that can be set in response to VOLT:TRIG? MAX
If the trigger voltage is not set, the IMM level (voltage set by VOLT <NRf+>) will be returned.

VOLT:PROT:LEV

Set the OVP voltage.

Command

```
[SOURce:]VOLTage:PROTection:LEVel <NRf+>
[SOURce:]VOLTage:PROTection:LEVel?
```

Parameter

Values:	OVP value setting range*	The maximum number of characters that can be entered is 12 (including the decimal point).
	MIN	Minimum OVP value (105 % of the voltage setting)
	MAX	Maximum OVP value
Unit:	V	

* See “Voltage and Current Setting Ranges” *(p.82)* in the appendix.

Ex:

```
VOLT:PROT:LEV 2.5
VOLT:PROT:LEV MIN
VOLT:PROT:LEV? MIN
VOLT:PROT:LEV? MAX
```

Response

Returns the OVP value in NR3 format as follows.
The present OVP value in response to VOLT:PROT:LEV?
The minimum OVP value that can be set in response to VOLT:PROT:LEV? MIN
The maximum OVP value that can be set in response to VOLT:PROT:LEV? MAX

VOLT:PROT:LOW:STAT

Selects UVL or UVP.

Command

```
[SOURce:]VOLTage:PROTection:LOW:STATe <CRD>
[SOURce:]VOLTage:PROTection:LOW:STATe?
```

Parameter

Values:		
	UVP	Undervoltage protection
	UVL	Undervoltage limit

Ex:

```
VOLT:PROT:LOW:STAT UVP
```

Response Returns UVP if undervoltage protection is selected or UVL if undervoltage limit is selected in response to VOLT:PROT:LEV?.

VOLT:PROT:LOW

Set the UVP/UVL voltage.

Command

```
[SOURce:]VOLTage:PROTection:LOW[:LEVel] <NRf+>
[SOURce:]VOLTage:PROTection:LOW[:LEVel]?
```

Parameter

Values:		
	UVP/UVL value setting range*	The maximum number of characters that can be entered is 12 (including the decimal point).
	MIN	Minimum UVP/UVL value
	MAX	Maximum UVP/UVL value (95 % of the voltage setting)
Unit:	V	

* See “Voltage and Current Setting Ranges” *(p.82)* in the appendix.

Ex:

```
VOLT:PROT:LOW 2.5
VOLT:PROT:LOW? MIN
VOLT:PROT:LOW? MAX
```

Response Returns the voltage in NR3 format as follows.
The present UVP/UVL value in response to VOLT:PROT:LOW?
The minimum UVP/UVL value that can be set in response to VOLT:PROT:LOW? MIN
The maximum UVP/UVL value that can be set in response to VOLT:PROT:LOW? MAX

VOLT:MODE

Selects the advanced output programmable function *(p.64)* mode for voltage output. If set to LIST or WAVE mode, the trigger subsystem will be reset in the same manner as the ABORt command, and PAV will be placed in the idle state. The voltage subsystem and current subsystem cannot be executed simultaneously.

Command

```
[SOURce:]VOLTage:MODE <CRD>
[SOURce:]VOLTage:MODE?
```

Parameter

Values:	NONE	No mode selection
	FIXed	FIXed mode
	LIST	LIST mode
	WAVE	WAVE mode

Ex:

```
VOLT:MODE LIST
VOLT:MODE FIX
```

Response

Returns the present advanced output programmable function mode in CRD format in response to VOLT:MODE?.

Current subsystem

Command hierarchy

CURRent			
	[:LEVel]		
		[:IMMediate]	
		[:AMPLitude] <NRf+>	Sets the output current.
		:TRIGger <NRf+>	Sets the trigger current.
	:MODE <CRD>		Sets the trigger control mode.

CURR

Sets the output current.

Command

```
[SOURce:]CURRent[:LEVel][:IMMediate][:AMPLitude] <NRf+>
[SOURce:]CURRent[:LEVel][:IMMediate][:AMPLitude]?
```

Parameter

Values: Current setting range *The maximum number of characters that can be entered is 12 (including the decimal point).

MIN	Minimum value
MAX	Maximum value

Unit: A

* See “Voltage and Current Setting Ranges” *(p.82)* in the appendix.

NOTE

The current can be set 5 % higher than the maximum value in the setting range, but avoid setting it above the maximum value. Use exceeding the ratings is outside the guaranteed range.

Ex:

```
CURR 500 MA
CURR:LEV .5
CURR? MAX
CURR? MIN
```

Response

Returns the current in NR3 format as follows.
The present current in response to CURR?
The minimum current that can be set in response to CURR? MIN
The maximum current that can be set in response to CURR? MAX

CURR:TRIG

Sets the current (trigger current) to output after receiving a trigger signal.

Command

```
[SOURce:]CURRent[:LEVel]:TRIGgered [:AMPLitude] <NRf+>
[SOURce:]CURRent[:LEVel]:TRIGgered [:AMPLitude]?
```

Parameter

Values:

Same as CURR *(p.82)*	The maximum number of characters that can be entered is 12 (including the decimal point).
MIN	Minimum value
MAX	Maximum value

Unit: V

```
CURR:TRIG 3200 MA
CURR:LEV:TRIG 3.2
CURR:TRIG? MAX
CURR:TRIG? MIN
```

Response

Returns the current in NR3 format as follows.
The present trigger current in response to CURR:TRIG?
The minimum trigger current that can be set in response to CURR:TRIG? MIN
The maximum trigger current that can be set in response to CURR:TRIG? MAX
If the trigger current is not set, the IMM level (current set by CURR <NRf+>) will be returned.

CURR:MODE

Selects the advanced output programmable function *(p.64)* mode for current output. If set to LIST or WAVE mode, the trigger subsystem will be reset in the same manner as the ABORt command, and PAV will be placed in the idle state. The voltage subsystem and current subsystem cannot be executed simultaneously.

Command

```
[SOURce:]CURRent:MODE <CRD>
[SOURce:]CURRent:MODE?
```

Parameter

Values:

NONE	No mode selection
FIXed	FIXed mode
LIST	LIST mode
WAVE	WAVE mode

Ex:

```
CURR:MODE LIST
CURR:MODE FIX
```

Response

Returns the present advanced output programmable function mode in CRD format in response to CURR:MODE?.

Measurement subsystem

Command hierarchy

MEASure		
	:CURRent[:DC]?	Queries the output current.
	:VOLTage[:DC]?	Queries the output voltage.
	:POWer[:DC]?	Queries the output power.

MEAS:CURR?

Queries the output current.

Command **MEASure:CURRent[:DC]?**

Unit: A

Response Returns the output current in NR3 format (five significant digits) in response to MEAS:CURR?.

MEAS:VOLT?

Queries the output voltage.

Command **MEASure:VOLTage[:DC]?**

Unit: V

Response Returns the output voltage in NR3 format (five significant digits) in response to MEAS:VOLT?.

MEAS:POW?

Queries the output power.

Command **MEASure:POWer[:DC]?**

Unit: W

Response Returns the output power in NR3 format (five significant digits) in response to MEAS:POW?.

Display subsystem

Command hierarchy

DISPlay		
	[:WINDow]:STATus <bool>	Display on/off
	[:WINDow]:FLASh <bool>	Display blinking

DISP:STAT

Switches the front panel voltmeter and ammeter displays on or off.

Command

```
DISPlay[:WINDow]:STAT <bool>
DISPlay[:WINDow]:STAT?
```

Parameter

Values:	ON (1)	Display on
	OFF (0)	Display off

Ex:

```
DISP:STAT 1
DISP:STAT OFF
```

Response Returns 1 if the display is on or 0 if the output is off in response to DISP:STAT?.

DISP:FLAS

Makes the front panel voltmeter/ammeter displays blink.

Command

```
DISPlay[:WINDow]:FLASh <bool>
```

Parameter

Values:	ON (1)	Blinking on
	OFF (0)	Blinking off

Ex:

```
DISP:FLAS 1
DISP:FLAS OFF
```

Start subsystem

Command hierarchy

INITate		
	[:IMMediate]	Enables the trigger subsystem.
	:CONTinuous <bool>	Sets the trigger function to auto continue or single operation.

INIT

Enables the trigger subsystem.

Command **INITiate[:IMMediate]**

Ex:

INIT:IMM

INIT:CONT

Sets the trigger function to auto continue or single operation.

Command **INITiate:CONTinuous <bool>**
INITiate:CONTinuous?

Parameter

Values:	ON (1)	Trigger subsystem is continuously enabled, and INIT is redundant. All parameter changes are invalid. The display will show "Err." To change parameters, send an ABORt command.
	OFF (0)	Enables the trigger subsystem only for a single trigger action. The subsystem must be enabled prior to each subsequent trigger action.

Ex:

INIT:CONT 1
INIT:CONT ON

Response Returns 1 if the trigger function is in auto continue mode or 0 if it is in single operation mode in response to INIT:CONT?.

Trigger subsystem

To handle trigger signals, enable the trigger subsystem. If it is not enabled, the specified condition will not take effect even when a trigger signal is received.

Command hierarchy

TRIGger			
	[:START]		Enables triggers.
		:DELay <NRf+>	Sets the trigger delay time.
		:SOURce <CRD>	Sets the trigger source.
ABORt			Resets the trigger subsystem.

TRIGger

Executes a software trigger.

Command **TRIGger[:STARt][:IMMediate]**

TRIG:DEL

Sets the delay time from when a trigger is detected until the PAV output setting is changed.

Command
TRIGger[:STARt]:DELay <NRf+>
TRIGger[:STARt]:DELay?

Parameter Values: 0 to 65.000
Unit: S
Ex:
TRIG:DEL .25
TRIG:DEL MAX

Response Returns the delay time in NR3 format in response to TRIG:DEL?.

TRIG:SOUR

Selects the trigger source.

Command
TRIGger[:STARt]:SOURce <CRD>
TRIGger[:STARt]:SOURce?

Parameter

Value		
	BUS	Bus (*TRG or TRIG) and front panel key
	EXT	Rear panel trigger input terminal

Ex:
TRIG:SOUR BUS

Response Returns the present trigger source in CRD format in response to TRIG:SOUR?.

ABOR

Resets the trigger subsystem, even when in the middle of a trigger cycle, and sets the PAV in the idle state.

Command **ABORt**

LIST subsystem

This subsystem handles parameters for outputting voltage or current using step transitions.

All list subsystem commands (likewise for CURR:MODE LIST and VOLT:MODE LIST) reset the trigger subsystem in the same manner as the ABOR command, even when in the middle of a trigger cycle, and sets the PAV in the idle state.

Command hierarchy

[SOURce:]			
	LIST		
		:VOLTage <NRf+> {,<NRf+>}	Sets output voltages for a step-transition sequence.
		:CURRent <NRf+> {,<NRf+>}	Sets output currents for a step-transition sequence.
		:STEP <CRD>	Sets the operation to perform when a trigger signal is received.
		:COUNt <NRf+>	Sets the number of times to execute the sequence.
		:DWELl <NRf+> {,<NRf+>}	Sets the step transition interval.
		:STORe <NR1>	Saves the LIST sequence data set last in the specified memory area.
		:LOAD <NR1>	Recalls LIST sequence data.

LIST:VOLT

Sets output voltages for a step-transition sequence. You can set multiple voltages by separating each value with a comma.

Command

```
[SOURce:]LIST:VOLTage <NRf+> {,<NRf+>}
[SOURce:]LIST:VOLTage?
```

Parameter

Values:	Same as VOLT *(p.82)*	The maximum number of characters that can be entered is 12 (including the decimal point).
	MIN	Minimum value
	MAX	Maximum value
Unit:	V	

NOTE

- Even if you send a sequence data that includes values that exceed the rated output voltage, the PAV will not return an error. In such situations, the existing values before the sequence data is sent are valid.
- If the sequence data contains values that are less than 0.1% of the rated output voltage, the specified sequence output may not be obtained.

Ex:

```
LIST:VOLT 2.0,2.5,3.0
LIST:VOLT MAX,2.5,MIN
```

Up to 12 points can be set.

Response Returns the present voltage setting in NR3 format in response to LIST:VOLT?.

LIST:CURR

Sets output currents for a step-transition sequence. You can set multiple currents by separating each value with a comma.

Command

```
[SOURce:]LIST:CURRent <NRf+> {,<NRf+>}
[SOURce:]LIST:CURRent?
```

Parameter

Values:	Same as CURR (p.82)	The maximum number of characters that can be entered is 12 (including the decimal point).
	MIN	Minimum value
	MAX	Maximum value
Unit:	A	

NOTE

- Even if you send a sequence data that includes values that exceed the rated output current, the PAV will not return an error. In such situations, the existing values before the send a sequence is sent are valid.
- If the sequence data contains values that are less than 0.2% of the rated output current, the specified sequence output may not be obtained.

Ex:

```
LIST:CURR 2.5,3.0,3.5
LIST:CURR MAX,2.5,MIN
```

Up to 12 points can be set.

Response Returns the present current setting in NR3 format in response to LIST:CURR?.

LIST:STEP

Sets the sequence operation to perform when a trigger signal is received.

Command

```
[SOURce:]LIST:STEP <CRD>
[SOURce:]LIST:STEP?
```

Parameter

Value	AUTO	Continuously executes the sequence after a trigger signal is received until the count is finished.
	ONCE	Executes the sequence once after a trigger signal is received

Ex:

```
LIST:STEP ONCE
```

Response Returns the present operation method in CRD format in response to LIST:STEP?.

LIST:COUN

Sets the number of times to execute the sequence (counter value).

Command

```
[SOURce:]LIST:COUNt <NRf+>
[SOURce:]LIST:COUNt?
```

Parameter

Values:	1 to 9999	A value exceeding 9999 is interpreted as infinity.
	INFinity	Continuously executes the sequence.

Ex:

```
LIST:COUN 3
LIST:COUN INF
```

Response Returns the counter value in NR1 format in response to LIST:COUN?.

LIST:DWEL

Sets the step transition interval.

Command `[SOURce:]LIST:DWELl <NRf+> {,<NRf+>}`
`[SOURce:]LIST:DWELl?`

Parameter Values: 0.01 to 129600

MIN	Minimum value
MAX	Maximum value

Unit: S

Ex:

`LIST:DWEL .6,1.5,1.5,.4`

Up to 12 points can be set.

Response Returns the step transition interval in NR3 format in response to LIST:DWEL?.

LIST:STOR

Saves the LIST sequence data (output voltage/current, step transition interval, STEP parameter, and counter value) set last to the specified memory number (1 to 4).

Command `[SOURce:]LIST:STORe <NR1>`

Parameter Values: 1 to 4 Memory number

Ex:

`LIST:STOR 3`

LIST:LOAD

Recalls LIST sequence data. Select a memory number (1 to 4) to recall the output voltage/current, step transition interval, STEP parameter, and counter value.

Command `[SOURce:]LIST:LOAD <NR1>`

Parameter Values: 1 to 4 Memory number

Ex:

`LIST:LOAD 3`

WAVE subsystem

This subsystem handles parameters for outputting voltage or current using ramp transitions.

Command hierarchy

[SOURce:]		
WAVE		
	:VOLTage <NRf+> {,<NRf+>}	Sets output voltages for a ramp-transition sequence.
	:CURRent <NRf+> {,<NRf+>}	Sets output currents for a ramp-transition sequence.
	:STEP <CRD>	Sets the operation to perform when a trigger signal is received.
	:COUNt <NRf+>	Sets the number of times to execute the sequence.
	:TIME <NRf+> {,<NRf+>}	Sets the ramp transition time.
	:STORe <NR1>	Saves the WAVE sequence data set last in the specified memory area.
	:LOAD <NR1>	Recalls WAVE sequence data.

WAVE:VOLT

Sets output voltages for a ramp-transition sequence. You can set multiple voltages by separating each value with a comma.

Command

```
[SOURce:]WAVE:VOLTage <NRf+> {,<NRf+>}
[SOURce:]WAVE:VOLTage?
```

Parameter

Values:	Same as VOLT (p.82)	The maximum number of characters that can be entered is 12 (including the decimal point).
	MIN	Minimum value
	MAX	Maximum value
Unit:	V	

NOTE

- Even if you send a sequence data that includes values that exceed the rated output voltage, the PAV will not return an error. In such situations, the existing values before the sequence data is sent are valid.
- If the sequence data contains values that are less than 0.1% of the rated output voltage, the specified sequence output may not be obtained.

Ex:

```
WAVE:VOLT 2.5,3.0,3.5
WAVE:VOLT MAX,2.5,MIN
```

Up to 12 points can be set.

Response Returns the present voltage setting in NR3 format in response to WAVE:VOLT?.

WAVE:CURR

Sets output currents for a ramp-transition sequence. You can set multiple currents by separating each value with a comma.

Command

```
[SOURce:]WAVE:CURRent <NRf+> {,<NRf+>}
[SOURce:]WAVE:CURRent?
```

Parameter

Values:	Same as CURR (p.82)	The maximum number of characters that can be entered is 12 (including the decimal point).
	MIN	Minimum value
	MAX	Maximum value
Unit:	A	

NOTE

- Even if you send a sequence data that includes values that exceed the rated output current, the PAV will not return an error. In such situations, the existing values before the sequence data is sent are valid.
- If the sequence data contains values that are less than 0.2% of the rated output current, the specified sequence output may not be obtained.

Ex:

```
WAVE:CURR 2.5,3.0,3.5
```

Up to 12 points can be set.

Response Returns the present current setting in NR3 format in response to WAVE:CURR?.

WAVE:STEP

Sets the sequence operation to perform when a trigger signal is received.

Command

```
[SOURce:]WAVE:STEP <CRD>
[SOURce:]WAVE:STEP?
```

Parameter

Value	AUTO	Continuously executes the sequence after a trigger signal is received until the count is finished.
	ONCE	Executes the sequence once after a trigger signal is received

Ex:

```
WAVE:STEP AUTO
```

Response Returns the present operation method in CRD format in response to WAVE:STEP?.

WAVE:COUN

Sets the number of times to execute the sequence (counter value).

Command

```
[SOURce:]WAVE:COUNt <NRf+>
[SOURce:]WAVE:COUNt?
```

Parameter

Values:	1 to 9999	A value exceeding 9999 is interpreted as infinity.
	INFinity	Continuously executes the list.

Ex:

```
WAVE:COUN 3
WAVE:COUN INF
```

Response Returns the counter value in NR3 format in response to WAVE:COUN?.

WAVE:TIME

Sets the ramp transition time.

Command

```
[SOURce:]WAVE:TIME <NRf+> {,<NRf+>}
[SOURce:]WAVE:TIME?
```

Parameter

Values: 0.01 to 129600

MIN	Minimum value
MAX	Maximum value

Unit: S

Ex:

```
LIST:TIME .6,1.5,1.5,.4
```

Up to 12 points can be set.

Response Returns the ramp transition in NR3 format in response to LIST:TIME?.

WAVE:STOR

Saves the WAVE sequence data (output voltage/current, ramp transition, STEP parameter, and counter value) set last to the specified memory number (1 to 4).

Command

```
[SOURce:]WAVE:STORe <NR1>
```

Parameter

Values: 1 to 4 Memory number

Ex:

```
WAVE:STOR 3
```

WAVE:LOAD

Recalls WAVE sequence data. Select a memory number (1 to 4) to recall the output voltage/current, ramp transition, STEP parameter, and counter value.

Command

```
[SOURce:]WAVE:LOAD <NR1>
```

Parameter

Values: 1 to 4 Memory number

Ex:

```
WAVE:LOAD 3
```

Status subsystem

In using this sub system, see also “Status Register and Fault Register” (p.56).

Command hierarchy

STATus			
	:OPERation		OPERation status register
		[:EVENt]?	Returns the event register value.
		:CONDition?	Returns the condition register value.
		:ENABle <NR1>	Enables the specified bit in the enable register.
	:QUEStionable		QUEStionable status register
		[:EVENt]?	Returns the event register value.
		:CONDition?	Returns the condition register value.
		:ENABle <NR1>	Enables the specified bit in the enable register.

STAT:OPER?

Queries the event register value of the OPERation status register. This is a read-only register. The condition register value can be read only when the enable register is enabled. This read-out clears the event register value.

Command **STATus:OPERation[:EVENt]?**

Ex:

STAT:OPER:EVEN?

Response Returns the event register value in NR1 format (decimal) in response to STAT:OPER:EVEN?.

STAT:OPER:COND?

Queries the condition (CONDition) register value of the OPERation status register. This is a read-only register and indicates the PAV’s operating status.

Command **STATus:OPERation:CONDition?**

Ex:

STAT:OPER:COND?

Response Returns the condition (CONDition) register value in NR1 format (decimal) in response to STAT:OPER:COND?.

STAT:OPER:ENAB

Sets the enable register value of the OPERation status register.

Setting a bit to 1 enables it. Only the bits enabled in the enable register are transferred from the condition register to the event register.

Command **STATus:OPERation:ENABle <NRf>**
STATus:OPERation:ENABle?

Parameter Values: 0 to 32767 (#H7FFF)

Ex:

```
STAT:OPER:ENAB 1312

STAT:OPER:ENAB 1
```

Response Returns the enable register value in NR1 format (decimal) in response to STAT:OPER:ENAB?.

STAT:QUES?

Queries the event register value of the QUEStionable status register. This is a read-only register. The condition register value can be read only when the enable register is enabled. This readout clears the event register value.

Command

```
STATus:QUEStionable[:EVENt]?
```

Ex:

```
STAT:QUES:EVEN?
```

Response Returns the event register value in NR1 format (decimal) in response to STAT:QUES:EVEN?.

STAT:QUES:COND?

Queries the condition (CONDition) register value of the QUEStionable status register. This is a read-only register and indicates the PAV's operating status.

Command

```
STATus:QUEStionable:CONDition?
```

Ex:

```
STAT:QUES:COND?
```

Response Returns the condition (CONDition) register value in NR1 format (decimal) in response to STAT:QUES:COND?.

STAT:QUES:ENAB

Sets the enable register value of the QUEStionable status register.

Setting a bit to 1 enables it. Only the bits enabled in the enable register are transferred from the condition register to the event register.

Command

```
STATus:QUEStionable:ENABle <NRf>
STATus:QUEStionable:ENABle?
```

Parameter Values: 0 to 32727 (#H7FD7)

Ex:

```
STAT:QUES:ENAB 18
```

Response Returns the enable register value in NR1 format (decimal) in response to STAT:QUES:ENAB?.

System (SYSTem) subsystem

Command hierarchy

SYSTem		
	:ERRor:ENABle	Enables error messages.
	:ERRor?	Queries system error messages.
	:LANGuage <CRD>	Sets the command language.
	:REMote	
	[:STATe]	Sets remote/local or local lockout mode.
	:VERSion?	Reads the SCPI version.
	:DATE?	Reads the last calibration date.
	:PON:TIME?	Reads the accumulated operation time since the POWER switch was first turned on.

SYST:ERR:ENAB

Enables error messages to be placed in queue.

Command **SYSTem:ERRor:ENABle**

SYST:ERR?

Queries the error number and error message. Errors are processed in FIFO order.
If there is no error, the PAV returns “0”, “No error.”

Command **SYSTem:ERRor?**

Ex:

SYST:ERR?

Response Returns an error message in NR1 and CRD format (“NR1”,“CRD”) in response to SYST:ERR?.

SYST:LANG

Sets the command language.

Command **SYSTem:LANGuage <CRD>**
SYSTem:LANGuage?

Parameter	Value		
		SCPI	SCPI
		PAG	PAG commands (cannot be used when the LAN interface is selected)

Response Returns the present command language in CRD format in response to SYST:LANG?.

SYST:REM

Sets remote/local or local lockout mode.

Command `SYSTem:REMote[:STAte] <CRD>`
`SYSTem:REMote?`

Parameter

Value		
	LOC (0)	Local
	REM (1)	Remote
	LLO (2)	Lockout

Ex:
`SYST:REM REM`

Response Returns the present local/remote or local lockout mode in CRD format in response to SYST:REM?.

SYST:VERS?

Queries the SCPI version that the PAV complies with.

Command `SYSTem:VERSion?`

Response Returns the SCPI version (1999.0) in response to SYST:VERS?.

SYST:DATE?

Queries the last calibration date.

Command `SYSTem:DATE?`

Response Returns the last calibration date in CRD format (“yyyy/mm/nn”) in response to SYST:DATE?.

SYST:PON:TIME?

Queries the accumulated operation time since the POWER switch was first turned on.

Command `SYSTem:PON:TIME?`
Unit: Minutes

Response Returns the accumulated operation time in NR1 format in response to SYST:PON:TIME?.

Global subsystem

- When global commands are used, there is no need to set individual addresses.
- All PAVs attached to the interface must be capable of accepting global commands.
- PAVs do not respond to global commands (including OPC and Not Busy). After a global command is sent, the status byte's busy bit is set to 0.
- If you want to send global command consecutively, allow at least 20 ms between each global command.

Command hierarchy

GLOBal		
	:OUTPut:STATe <bool>	Turns the output of all PAVs to on or off.
	:VOLTage[:AMPLitude] <NRf>	Sets the output voltages of all PAVs to the same value.
	:CURRent[:AMPLitude] <NRf>	Sets the output currents of all PAVs to the same value.
	:*SAV <NR1>	Saves the settings of all PAVs to memory.
	:*RCL <NR1>	Recalls the settings of all PAVs from memory.
	:*RCL	Resets all PAVs.

GLOB:OUTP:STAT

Turns the output of all PAVs to on or off. They turn on using the previously set output voltage and current. If turned off, the output voltage and current are set to zero.

Command **GLOBal:OUTPut:STATe <bool>**

Parameter Value OFF (0) Output off
ON (1) Output on

Ex:

GLOB:OUTP:STAT 1
GLOB:OUTP:STAT ON

GLOB:VOLT

Sets the output voltages of all PAVs to the same value.

Command **GLOBal:VOLTage[:AMPLitude] <NRf>**

Parameter Values: Same as VOLT*(p.82)* The maximum number of characters that can be entered is 12 (including the decimal point).

Unit: V

Ex:

GLOB:VOLT 15.77

GLOB:CURR

Sets the output currents of all PAVs to the same value.

Command `GLOBal:CURRent[:AMPLitude] <NRf>`

Parameter Values: Same as CURR *(p.82)* The maximum number of characters that can be entered is 12 (including the decimal point).

Unit: A

Ex:

`GLOB:CURR 15.77`

GLOB:*SAV

Saves the settings of each PAV to the selected memory number (1 to 4, same number for all PAVs).

Command `GLOBal:*SAV <NR1>`

Parameter Values: 1 to 4 Memory number

Ex:

`GLOB:*SAV 1`

GLOB:*RCL

Recalls the settings of each PAV from the selected memory number (1 to 4, same number for all PAVs).

Command `GLOBal:*RCL <NR1>`

Parameter Values: 1 to 4 Memory number

Ex:

`GLOB:*RCL 1`

GLOB:*RST

Resets all PAVs.

Command `GLOBal:*RST`

Status Register and Fault Register

This section explains the various status errors and the structure of the SRQ (service request) register. You can read or write to the registers using USB/RS232/RS485 commands.

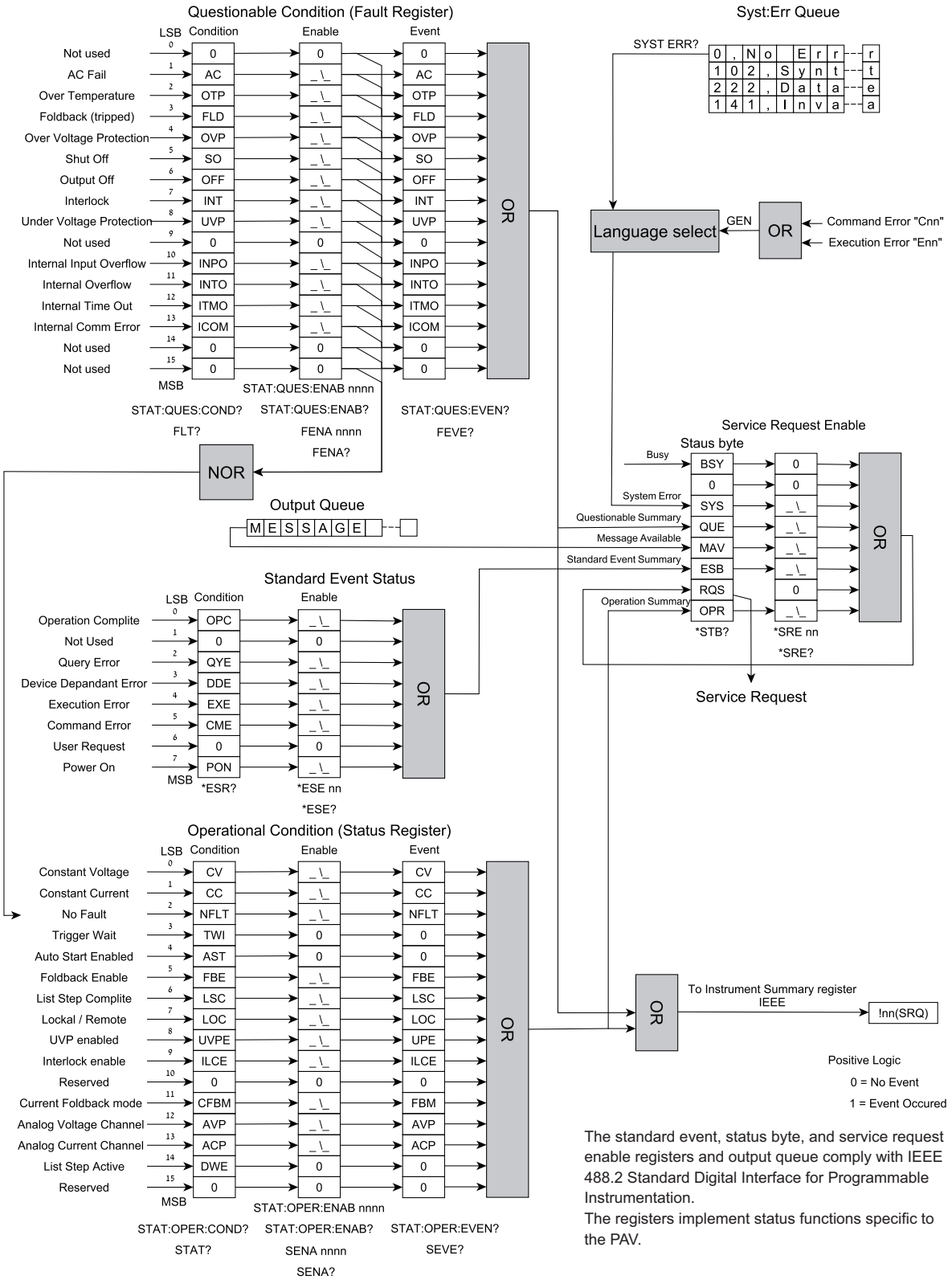

The standard event, status byte, and service request enable registers and output queue comply with IEEE 488.2 Standard Digital Interface for Programmable Instrumentation.
The registers implement status functions specific to the PAV.

Structure of the fault register (QUEStionable condition register) and status register (OPERation condition register)

Condition register

There are two condition registers for reading the PAV condition. Register bits can be used to determine whether the PAV is in a fault or normal condition. When a fault condition or mode is cleared, the bit is also cleared. These are read-only registers.

Fault register (QUEStionable condition register)

Bits in the fault register are set when faults occur (see the following table).

When a fault condition is cleared, the corresponding bit is also cleared.

Bit	Bit weight	Bit name	Description
0	1		
1	2	AC	AC failure
2	4	OTP	Overheat protection
3	8	FOD	Foldback protection
4	16	OVP	Overvoltage protection
5	32	SO	Shutoff
6	64	OFF	Output stop
7	128	INT	Output on/off control
8	256	UVP	Undervoltage
9	512	0	Not used
10	1024	INPO	Internal input overflow
11	2048	INTO	Internal overflow
12	4096	INMO	Internal timeout
13	8192	ICOM	Internal communication error
14	N/A	0	Not used
15	N/A	0	Not used

Status register (OPERation condition register)

Bits in the status register are set when the status changes (see the following table).
When the condition is cleared, the corresponding bit is also cleared.

Bit	Bit weight	Bit name	Description
0	1	CV	Constant voltage mode
1	2	CC	Constant current mode
2	4	NFL	No fault
3	8	TW	Trigger wait
4	16	AST	Auto start enabled
5	32	FBE	Foldback protection enabled
6	64	LSC	List step complete
7	128	LOC	Remote/local mode
8	256	UVP Ena	Undervoltage protection
9	512	ILC Ena	Output on/off control
10	1024		
11	2048	FBC	Foldback constant current setting
12	4096	AVP	External control voltage setting
13	8192	ACP	External control current setting
14	16384	DWE	List step active
15	N/A	0	Not used

Condition register, enable register, and event register

Condition register

The condition register monitors the PAV's present condition. This register is updated whenever a change occurs, so it is not possible to capture the changes from a PC or the like. Thus, such changes are recorded in the event register to allow reading from a PC or the like.

Event register

When a change occurs, the corresponding bit is sent to the event register. The bit state changes when the event register is read or cleared from a PC or the like. Thus, it is not possible determine whether a fault occurred or a mode changed.

Enable register

When the user sets the status or fault enable register, SRQs indicating errors will be transmitted.

Service request

When one or more changes occur in the event register, the PAV sends an SRQ message. SRQ messages are expressed as “!nn” where “nn” is the PAV address.

Standard event status group

This section explains the event register and enable register, which are programmed using common commands.

The standard event register latches events relating to interface communication status. The function of the standard event enable register is similar to the operation enable register and questionable status group.

Register commands

Bit	Bit weight	Bit name	Description
0	1	OPC (Operation complete)	Operation complete • This is set when the last command is finished and the software is ready to receive another command or when the query result is available.
1	2	0	Not used
2	4	QYE (Query error)	Query error • This is set when a query result could not be accepted.
3	8	DDE (Device dependent error)	Device dependent error • A PAV-specific error. The error is placed in the system error queue and indicated with a number greater than or equal to 0. For the error numbers, see “System Error Messages” *(p.76)*.
4	16	EXE (Execution error)	Execution error • This is set when a parameter exceeds its executable range.
5	32	CME (Command error)	Command error • This is set when a syntax error occurs.
6	64	0	Not used
7	128	PON (Power ON)	This is set when the power is turned on when the ESR bit is not set.

Status byte register

This register summarizes the information from other status groups that are defined in the “IEEE 488.2 Standard Digital Interface for Programmable Instrumentation.” You can read this register by serial polling or by using “*STB?.” The read data is the same for both read methods except for bit 6. If you send “*STB?,” bit 6 returns MSS.

If you use serial polling, bit 6 returns RQS. The “*CLS” command clears the status byte.

Bit	Bit weight	Bit name	Description
0	1	BSY	1 = Busy, 0 = Ready
1	2	0	Not used
2	4	SYS	System error
3	8	QUES (Questionable status summary)	Questionable status summary bit • This bit is set when an error is placed in the system error queue. • The system error queue can be read with a SYSTem:ERRor? query.
4	16	MAV (Message available)	Message available summary bit. • Indicates a message is available in the output queue.
5	32	ESB (Event status byte summary)	Event status summary bit • This is the ESR summary bit. It is set when any of the ESR bits are set, and cleared when the ESR is read.
6	64	MSS RQS (Request for service)	Master status summary bit • This is a real-time (unlatched) summary of all status byte register bits that are enabled by the service request enable register. MSS is set whenever at least one service request occurs. Request service bit • When the PAV issues a service request, an SRQ is set on the interrupt line, and this bit holds the RQS state.
7	128	OPER (Operation status summary)	Operation status summary bit

Service request interrupt

You can check the cause of a service request in the following manner.

You can investigate which summary bits are active by serial polling or by sending *STB?.

Then, you can investigate which event caused the summary bit to be set and read the summary bit related to the event register. When you read the event register, the event register will be cleared. This will cause the related summary bits to also be cleared.

Interrupts occur on specific conditions and continues until the event disappears. If this is a problem, you can program the relevant bit of the status group enable register to prevent the event from occurring. The quickest way to prevent interrupts is to disable service requests by changing the service request enable register.

Output queue

The output queue is a FIFO data register that records PAV messages addressed to the controller. These messages are held until the controller reads them. This queue holds one or more pieces of byte data. When a message is available, bit 4 (MAV) of the status byte register is set. When there are too many messages in this queue, a system error message will be generated. The output queue is cleared at power-on and by *CLS.

Error messages

System Error Messages are read back via the SYST:ERR? query. The error number is the number in the PAV error queue. When you send a SYST:ERR? command, the error number is returned as a variable. The error number is returned along with the corresponding error message.

SCPI syntax errors and interface-related system errors are provided in “System Error Messages” *(p.76)* of the appendix.

This page has been intentionally left blank.

3

Advanced Output Programmable Function

This chapter explains the advanced output programmable function.

Advanced Output Programmable Function

The advanced output programmable function (sequence function) is used to output preset voltage or current using input triggers. There are three modes: FIX, LIST, and WAVE.

In FIX mode, you can only set one voltage or current. In LIST (step transition) and WAVE (ramp transition) modes, you can set up to 12 voltages or currents to produce sequence output.

Mode selection and voltage/current settings can only be specified using commands, but other conditions *(p.69)* and the execution of sequence output *(p.72)* can be specified using SCPI commands or from the front panel as well. You can save and recall from memory up to four sets of LIST/WAVE sequence data that you set.

The advanced output programmable function operates in sync with input triggers *(p.69)*. Trigger signals can be output from the PAV according to the output trigger mode *(p.70)*.

NOTE

- After the operation of the advanced output programmable function is complete, the trigger function enters auto continue mode, and all parameter changes are void. Use the INIT:CONT 0 command to set the trigger function to single operation or the ABOR command to reset the trigger sub system.
- The LIST/WAVE sequence data that you set and trigger conditions are reset when the power switch is turned off. To execute the sequence output again, after turning on the power switch, follow the procedure in “Sequence output” *(p.72)*.
- The memory used to save LIST/WAVE sequence data is different from the memory used to save and recall conditions from the MEMO (Memory) menu accessed through the front panel.

Application software SD024-PAV (sold separately)

SD024-PAV is a software application that you can use to easily create sequence data for LIST and WAVE modes, without using commands. Sequence output can also be executed from the PC.

LIST/WAVE sequence data that you create is saved in the PAV series memory as follows:

Saved data	Memory*
LIST sequence data	LI
WAVE sequence data	L2

* L3 and L4 are not used.

You can execute sequence output even if you do not have a PC by recalling saved data from the front panel. *(p.72)*

FIX mode

The output changes according to input triggers. For details, see VOLTage:TRIGger *(p.35)* and CURRent:TRIGger *(p.39)*.

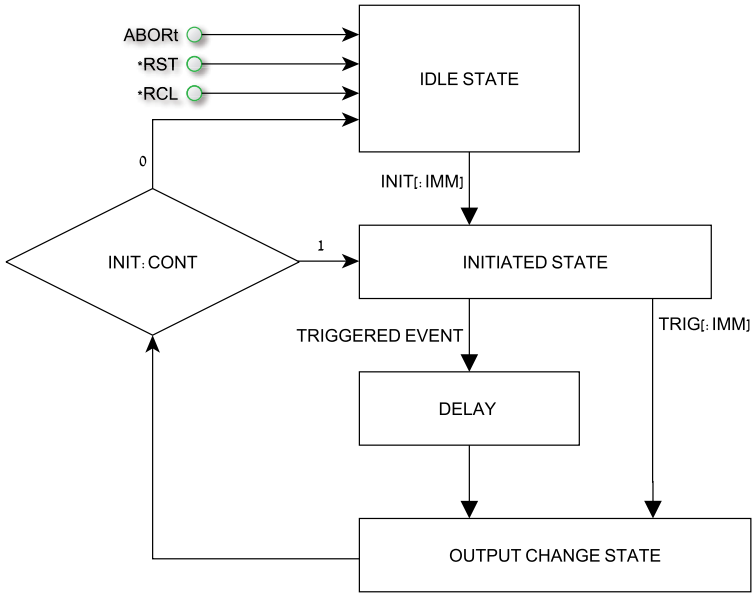

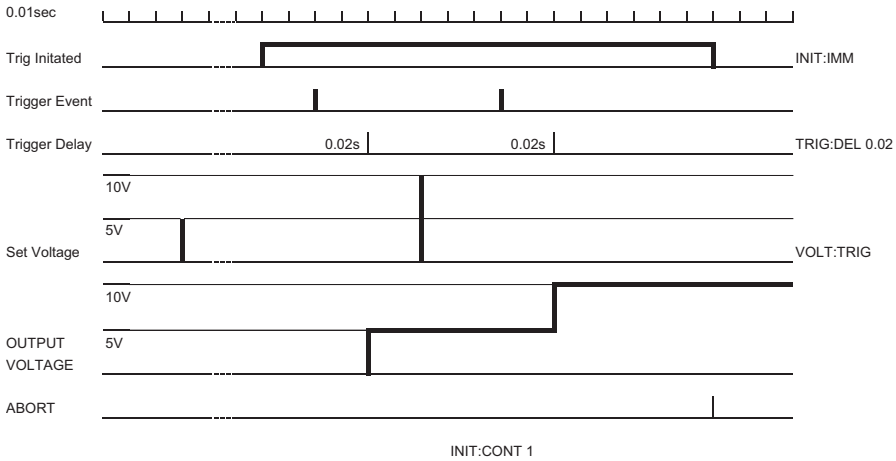

LIST mode

The output value changes stepwise according to the “LIST subsystem” *(p.44)* parameters based on input triggers.

To select the mode, use the VOLT:MODE command *(p.37)* for the voltage sub system and the CURR:MODE command *(p.39)* for the current sub system.

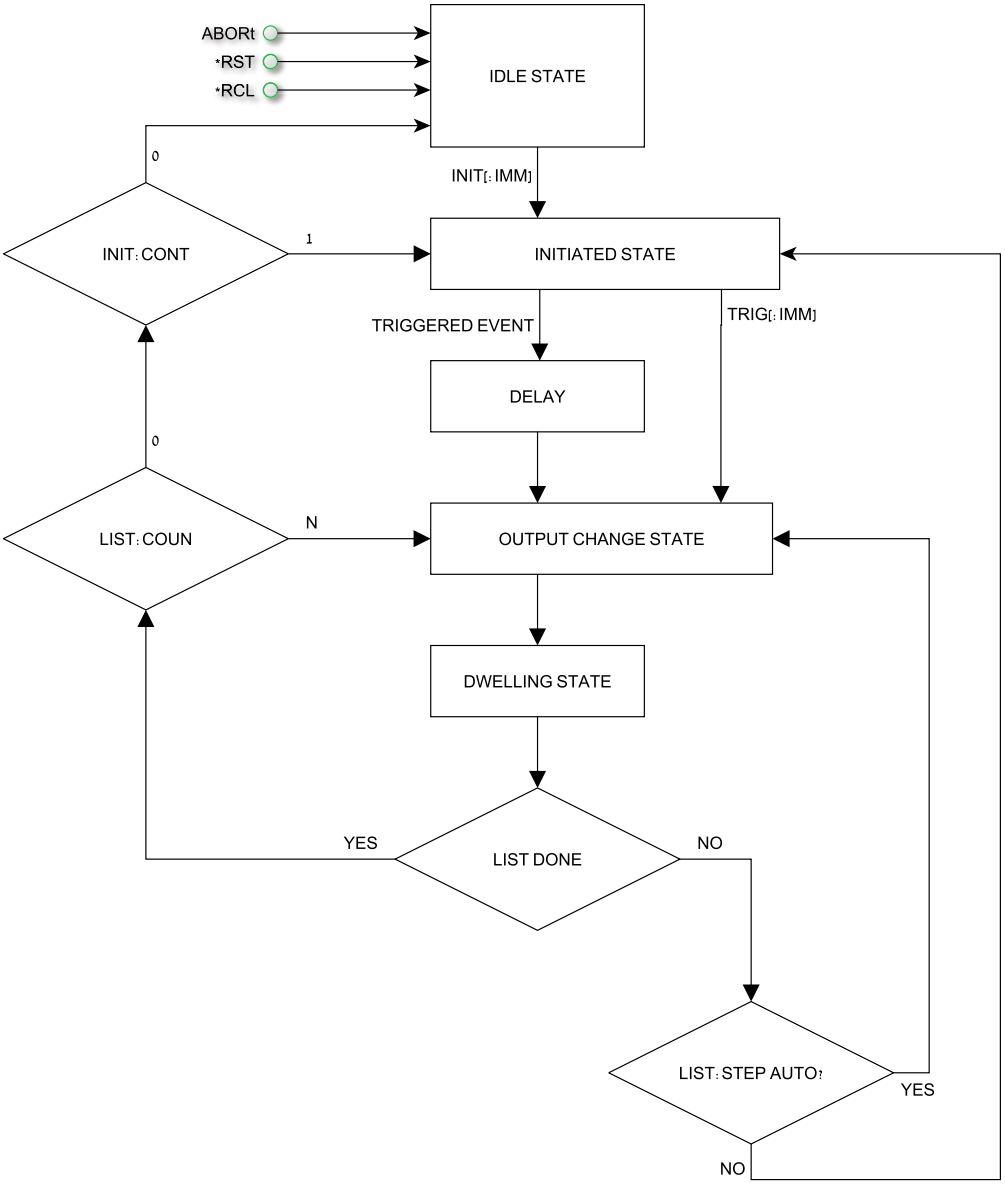

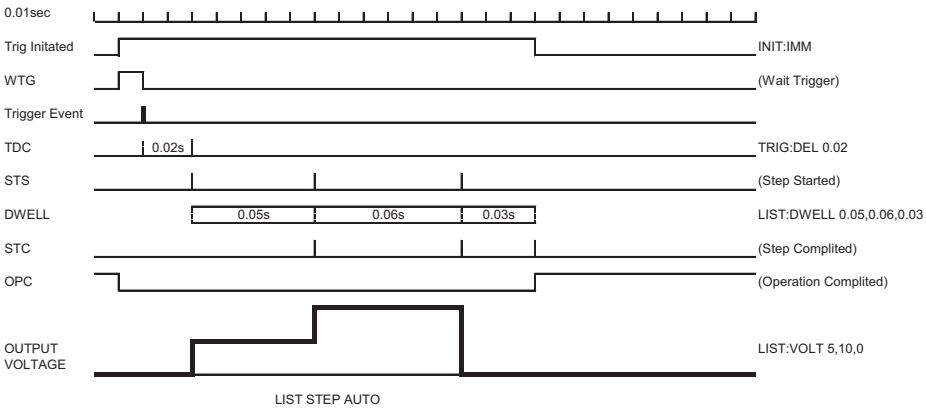

WAVE mode

The output value changes with a slope according to the “WAVE subsystem” *(p.47)* parameters based on input triggers.

To select the mode, use the VOLT:MODE command *(p.37)* for the voltage sub system and the CURR:MODE command *(p.39)* for the current sub system.

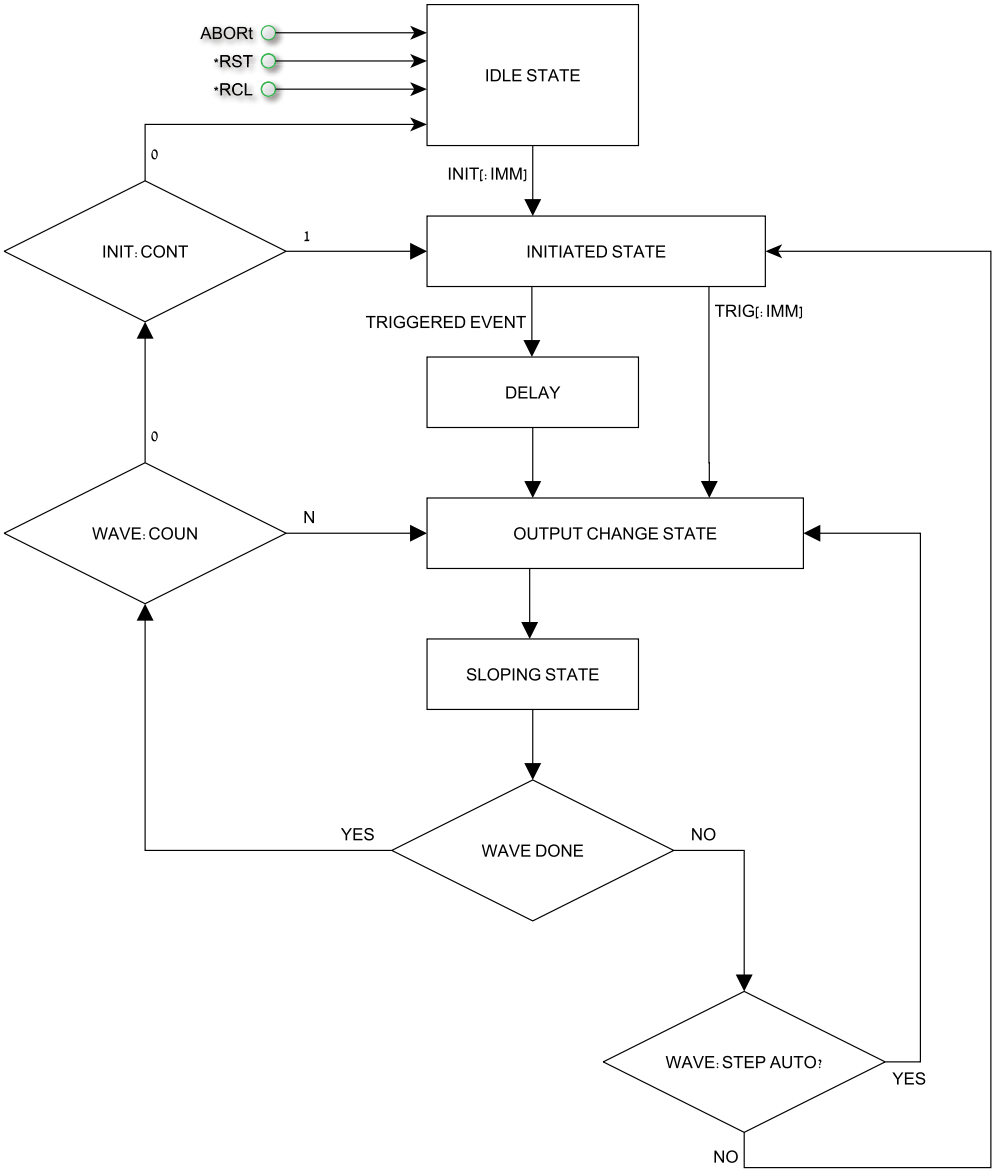

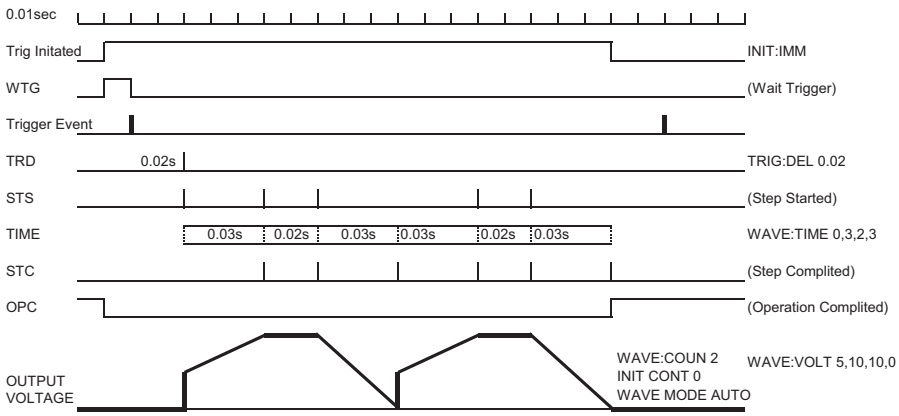

Trigger

Trigger conditions and sequence creation conditions (excluding voltage and current conditions) can be set from the front panel menu. The menu structure and functions are explained below.

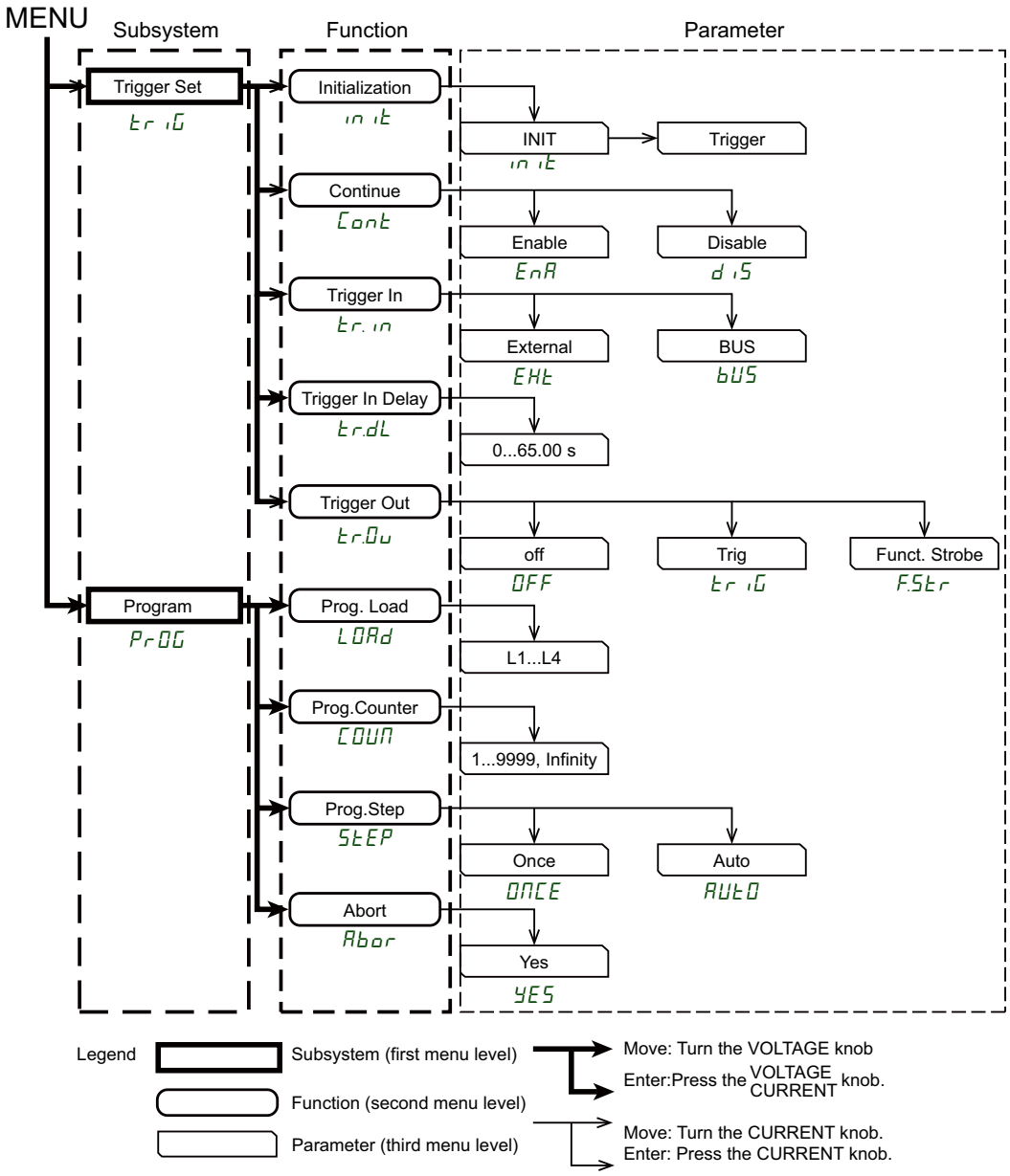

■ Subsystem, function, and parameter

These are the first, second, and third menu levels. The following items are available.

First level		Second level		Third level		Notes Reference command
Subsystem		Function		Parameter		
Description	Display	Description	Display	Description	Display	
Trigger Set (trigger setting)	tr iG	Initialization	in it	INIT	in it	Initialization, sets the PAV in trigger-wait state[1]. INIT *(p.42)*
		Continue	Cont	ENA	EnA	INIT:CONT *(p.42)*
				DIS	dis	
		Trigger In (Input trigger)	tr. In	BUS (communication/front panel)	bUS	TRIG:SOUR *(p.43)*
				EXT (Analog)	EXt	
Trigger Set (trigger setting)	tr iG	Trigger delay	trdL	0 s to 65.00 s	0.000 to 65.00	Press the FINE key to select coarse or fine adjustment. TRIG:DEL *(p.43)*
		Trigger Out	trOu	OFF	OFF	OUTP:TTLT:MODE *(p.32)*
				TRIG	tr iG	
				Funct. Strobe	FStr	
Program (programming)	PrOG	Prog. Load	LOAd	L1 to L4	L 1 to L 4	LIST:LOAD *(p.46)* WAVE:LOAD *(p.49)*
		Prog. Counter	COUn	1 to 9999, Infinity	1 to 9999, INF	Press the FINE key to select coarse or fine adjustment. LIST:COUN *(p.45)* WAVE:COUN *(p.48)*
		Prog. Step	StEP	ONCE	ONCE	LIST:STEP *(p.45)* WAVE:STEP *(p.48)*
				AUTO	AUtO	
		ABORt execution	Abor	YES	YES	ABOR *(p.43)*

1 If you press the CURRENT knob to select " in it," the display changes to "tr iG" (TRIG), which indicates that the PAV is in a trigger wait state. If saved data is not recalled from the memory in advance, the display will not show "tr iG." If the input trigger is set to "bUS," pressing the CURRENT knob when the output is turned on will cause the PAV to receive triggers and change the output.

Input trigger

The procedure to set the input trigger from the front panel is shown below.
For details on using the command, see TRIG:SOUR *(p.43)*.

1 Press MENU.
The MENU LED lights, and the voltmeter shows "SEt."

2 Turn the VOLTAGE knob until the voltmeter shows "tr iG."

3 Press the VOLTAGE knob.
The voltmeter shows " in it."

4 Turn the VOLTAGE knob to show "tr. In."

5 Press the VOLTAGE knob.
The voltmeter shows "tr. In," and the ammeter shows "EXt" or "bUS."

6 Turn the CURRENT knob to select trigger input.

7 **Press the CURRENT knob.**

Output trigger

Output triggers are transmitted from the rear panel J3-3 terminal (Trigger Out). There are three output trigger modes.

Output trigger mode	Advanced output programmable function setting	
	NONE or FIX	LIST or WAVE
TRIG (trigger)	A trigger signal is output whenever the output status changes.	A trigger signal is output when a LIST or WAVE action is complete.
FSTR (function strobe)	A trigger signal is automatically output whenever the output parameter (voltage, current) is changed.	A trigger signal is automatically output whenever a step process is complete.
OFF	No trigger output	No trigger output

The procedure to set the output trigger from the front panel is shown below.

For details on using the command, see OUTP:TTLT:MODE *(p.32)*.

1 **Press MENU.**
The MENU LED lights, and the voltmeter shows "SEt."

2 **Turn the VOLTAGE knob to show "tr iG."**

3 **Press the VOLTAGE knob.**
The voltmeter shows " in it."

4 **Turn the VOLTAGE knob to show "tr.Ou."**

5 **Press the VOLTAGE knob.**
The voltmeter shows "tr.Ou," and the ammeter shows "OFF," "tr iG," or "F.Str."

6 **Turn the CURRENT knob to select trigger output.**

7 **Press the CURRENT knob.**

WAVE Mode Sequence Creation Example

This section describes a typical procedure to create a waveform. For concrete examples, see “Reference examples” *(p.74)*.

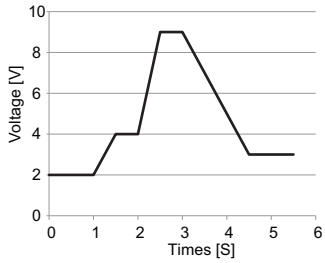

Creating a sequence

1 **Specify an advanced output programmable mode.**
(Ex) VOLT:MODE WAVE

2 **Set the voltage.**
(Ex) WAVE:VOLT 5,10,10,0

3 **Set the timing.**
(Ex) WAVE:TIME 0,2,3,2

4 **Set the number of repetitions.**
(Ex) WAVE: COUN 2

5 **Set the action to perform when triggers are received to “AUTO” or “ONCE.”**
(Ex) WAVE:STEP AUTO

6 **Save the settings to memory.**
(Ex) WAVE:STOR 2
Because settings can be saved to the PAV memory, waveforms can be sequence output without connecting a PC.

7 **Turn the POWER switch off and then back on.**

Sequence output

NOTE The LIST/WAVE sequence data that you set and trigger conditions are reset when the power switch is turned off. To execute the sequence output again, after turning on the power switch, follow the following procedure.

Using communication commands

1 Recall LIST/WAVE sequence data that is saved.
(Ex) VOLT:WAVE:LOAD 2

2 Set the number of repetitions.
(Ex) WAVE:COUN 2

3 Set the trigger input source.
(Ex) BUS command-based trigger
TRIG:SOUR BUS

4 Set the trigger auto continue mode.
(Ex) Continue mode
INTI:CONT ON

5 Set an INIT command to place the PAV in a trigger-wait state.

6 Send an OUTP ON command to turn the output on.

7 Send a TRG command.

Using the front panel menu

The following procedure is brief. For details on menu operation, see the user's manual. For trigger settings, see "Trigger" *(p.68)*.

1 The saved LIST/WAVE sequence data is loaded.
MENU → "PrOG" → "LOAd" →"L2"

NOTE "Err" may appear when you are selecting from L1 to L4. If this occurs, the execution program is not loaded or the trigger subsystem is in auto continue mode. Select "ABORt " to abort the mode.
MENU → "ProG" → "Abor" → "YES"

2 Set the trigger input source.
MENU → "tr iG" → "tr. In" → "bUS"
"bUS": Front panel and external signal to the rear panel J3-8 terminal.

3 Set the trigger's trigger initialize continue mode.
Single trigger mode or continue mode
MENU → "tr iG" → "CONt"→ "EnA"

4 **Set an INIT command to place the PAV in a trigger-wait state.**
MENU → "tr iG" → "IN it" → "IN it"

5 **Press MENU to exit from the menu.**

6 **Press OUTPUT.**

7 **Press the CURRENT knob to generate a trigger.**

Reference examples

LIST mode

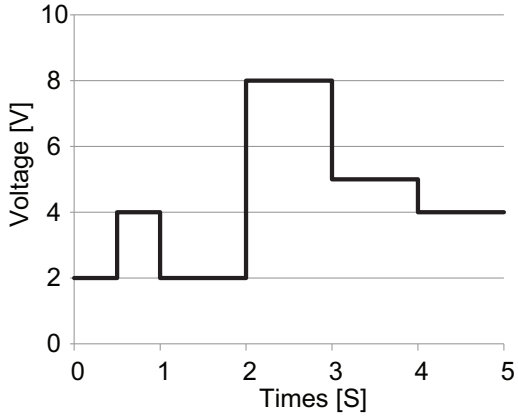

`TRIG:SOURce BUS`	Sets the trigger input source to external analog signal.
`VOLT:MODE LIST`	Sets the advanced output programmable function mode to “LIST.”
`LISt:VOLT 2,4,2,8,5,4`	Sets the voltages (V) to “2,4,2,8,5,4.”
`LIST:DWL 0.5,0.5,1,1,1,1`	Sets the time intervals to “0.5,0.5,1,1,1,1.”
`LIST:COUN 1`	Sets the execution count to “1.”
`LIST:STEP AUTO`	Sets the execution mode to “AUTO.”
`INIT:CONT OFF`	Sets the trigger subsystem to single trigger.
`INIT`	Initializes triggering.
`OUTP ON`	Turns output on
`TRIG`	Trigger command

WAVE mode

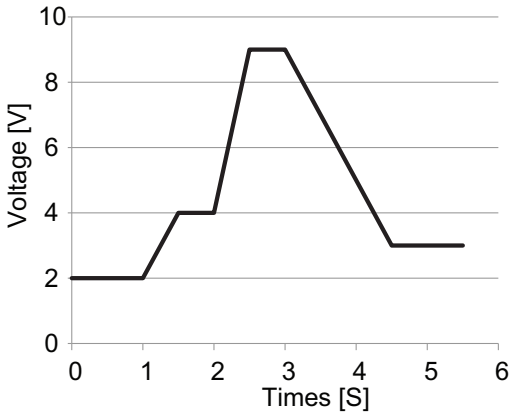

`TRIG:SOURce BUS`	Sets the trigger input source to command.
`VOLT:MODE WAVE`	Sets the advanced output programmable function mode to “WAVE.”
`WAVE:VOLT 2,2,4,4,9,9,3,3`	Sets the voltages (V) to “2,2,4,4,9,9,3,3.”
`WAVE:TIME 0,1,0.5,0.5,0.5,0.5,1.5,1`	Sets the slope times to “0,1,0.5,0.5,0.5,0.5,1.5,1.”
`WAVE:COUN 2`	Sets the execution count to “2.”
`WAVE:STEP AUTO`	Sets the execution mode to “AUTO.”
`INIT:CONT ON`	Sets the trigger subsystem to auto continue.
`INIT`	Initializes triggering.
`OUTP ON`	Turns output on
`TRIG`	Trigger command

Appendix

A System Error Messages
B Command List
C Voltage and Current Setting Ranges
D Default Settings
F PAG Commands

A System Error Messages

Description

To read a system error message, send a SYST:ERR? *(p.52)*. Error messages are returned in the following format.

<Number><,><"><Message:PAV address><">

Error messages are stored in a FIFO queue.

The SYST:ERR queue can hold up to 10 error messages. When the 11th message is generated, overflow occurs, and the 10th message is replaced with -350,"Queue Overflow." After the queue overflows, the existing 10 messages are stored, but subsequent messages are not.

The SYST:ERR queue is cleared in the following situations.

- SYST:ERR? is received until there are no more errors.
- *CLS command *(p.26)* is received.

If any message is in the SYST:ERR queue (except “No error”), bit 2 of the status byte is set.

If bit 2 is enabled, a service request is generated.

List of errors

Command error

Error numbers from -100 to -199 indicate that an IEEE 488.2 syntax error has been detected by the instrument’s parser. The occurrence of any error in this class causes the Command Error bit (bit 5) in the event status register to be set.

No.	Message	Error message description
0	No error	No error is reported.
-100	Command error	Generic syntax error.
-101	Invalid Character	Received a character other than those listed below. a to z, A to Z, 0 to 9, ?, *, :, ;, period, space, CR, LF
-104	Data type error	The parser recognized a data element different than one allowed.
-109	Missing parameter	Fewer parameters were received than required for the header.
-131	Invalid suffix	The suffix does not follow the syntax, or the suffix is inappropriate for the PAV.

Execution error

Errors from -299 to -200 indicate that an error has been detected by the instrument’s execution control block. The occurrence of any error in this class causes the Execution Error bit (bit 4) in the event status register to be set.

No.	Message	Error message description
-200	Execution Error	Overall syntax error related to several devices.
-222	Data Out Of Range	The voltage setting, current setting, or OVP value exceeds the output rating.
-223	Too Much Data	Blocks, strings, or expressions are too long.
-241	Hardware Missing	A non-existing PAV address was set in multi drop mode (LAN only).
-284	Program Currently Running	The device’s trigger subsystem was enabled with an INIT command while running.
-286	Data Load Empty	Data is not saved in the LIST or WAVE cells.

Device-specific error

Errors from -399 to -300 indicate that a device-specific error has been detected. The occurrence of any error in this class causes the Device Dependent Error bit (bit 3) in the event status register to be set.

No.	Message	Error message description
-350	Queue Overflow	Too many error message are stored in the SYST:ERR queue. The most recent message was discarded.
-301	PV Above OVP	Tried to set a voltage higher than the OVP value.
-302	PV Below UVL	Tried to set a voltage lower than the UVL value.
-304	OVP Below PV	Tried to set an OVP value that is lower than the voltage setting.
-305	UVL Below Zero	The UVL value was set to 0 V or less.
-306	UVL Above PV	Tried to set a UVL value that is higher than the voltage setting.
-307	On During Fault	Tried to turn the output on when a fault was present.
-320	Under-Voltage Shutdown	The undervoltage protection was activated, and the output was shut off.
-321	AC Fault Shutdown	Shut down due to a voltage drop or open phase.
-322	Over-Temperature Shutdown	Shut down due to an overtemperature protection activation.
-323	Fold-Back Shutdown	Shut down due to an foldback protection activation.
-324	Over-Voltage Shutdown	Shut down due to an overvoltage protection activation.
-325	Analog Shut-Off Shutdown	Shut down due to the rear panel J3-5 SO function.
-326	Output-Off Shutdown	Output shut off from front panel keys.
-327	Interlock Open Shutdown	Shut down due to the rear panel J3-4 open circuit.
-329	SLAD mode	The command cannot be executed in advanced parallel operation.
-340	Internal Message Fault	An unspecified general internal error message.
-341	Input Overflow	The receive data buffer contains data longer than 499 characters.
-342	Internal Overflow	The receive buffer overflowed from sending too many commands.
-343	Internal Timeout	The interface did not receive the response from the PAV before the timeout limit.
-344	Internal Checksum	The interface received the checksum error from the PAV.
-399	Unknown Error	—

Query error

Error numbers from -499 to -400 indicate that the output queue control of the instrument has detected a problem with the message exchange protocol described in IEEE 488.2, chapter 6. The occurrence of any error in this class causes the Query Error bit (bit 2) in the event status register to be set.

No.	Message	Error message description
-400	Query Error	—
-410	Query INTERRUPTED	The next query was received while the present query was being processed.

B Command List

Common commands

Command	Description	Query Available	PAG Command
***CLS**	Clears all status structures.		CLS
***ESE <NR1>**	Changes the content of the event status enable register .	Yes	-
***ESR?**	Reads the event status register value.		-
***IDN?**	Reads the manufacturer name, model, serial number, and firmware version.		IDN?
***OPC**	Sets the OPC bit (bit 0) of the event status register when all operations are complete.	Yes	-
***OPT?**	Queries the installed options.		-
***PSC <bool>**	Controls the auto register reset at startup.		-
***RCL <NR1>**	Reads settings from memory.		RCL
***RST**	Resets memory parameters.		RST
***SAV <NR1>**	Saves the operating status (memory parameters) to memory.		SAV
***SRE <NR1>**	Changes the content of the service request enable register.	Yes	-
***STB?**	Queries the contents of the status byte register and the MSS (master summary status) message.		-
***TRG**	When the trigger source is set to “BUS,” the trigger command starts the output.		-

Subsystem commands

SCPI command	Description	Query Available	PAG Command
ABORt	Resets the trigger subsystem, even when in the middle of a trigger cycle, and sets the PAV in the idle state.		-
DISPlay			
[:WINDow]:STATe <bool>	Voltmeter and ammeter displays on/off	Yes	-
[:WINDow]:FLASh <bool>	Voltmeter and ammeter displays blinking		-
GLOBal			
:CURRent			
[:AMPLitude] <NRf>	Sets the output currents of all PAVs to the same value.		GPC
:VOLTage			
[:AMPLitude] <NRf>	Sets the output voltages of all PAVs to the same value.		GPV
:OUTPut			
:STATe <bool>	Turns the output of all PAVs to on or off.		GOUT
***RCL <NR1>**	Recalls the settings of all PAVs from memory (the number is the memory number).		GRCL
***SAV <NR1>**	Saves the settings of all PAVs to memory (the number is the memory number).		GSAV
***RST**	Resets all PAVs.		GRST
INITiate			
[:IMMediate]	Enables the trigger subsystem.		-
:CONTinuous <bool>	Sets the trigger function to auto continue or single operation.	Yes	-
INSTrument			
:COUPle <CRD>	Sets the communication target to all PAVs.		-
:NSELect <NR1>	Sets the address of a single PAV to communicate with.	Yes	ADR

SCPI command	Description	Query Available	PAG Command
MEASure			
:CURRent[:DC]?	Queries the output current setting.		MC?
:VOLTage[:DC]?	Queries the output voltage setting.		MV?
:POWer[:DC]?	Queries the output power.		MP?
OUTPut			
[:STATe] <Bool>	Turns output on and off.	Yes	OUT[?]
:PON			
[:STATe] <bool>	Sets whether to use auto start mode or safe start mode at power-on.	Yes	AST[?]
:PROTection			
:CLEar	Releases the activation of the overvoltage protection (OVP), undervoltage protection (UVP), or foldback protection (FOLD).		-
:FOLDback			
[:MODE] <CRD>	Sets the foldback protection.	Yes	FLD[?]
:DELay <NRf+>	Sets the delay from when a foldback protection or undervoltage protection condition is detected until the protection action (output shutoff) is actually executed.	Yes	FBD[?]
:ILC			
:MODE <bool>	Sets the output on/off control.	Yes	RIE[?]
:TTLTrg			
:MODE <CRD>	Sets the condition for outputting trigger signals.	Yes	-
:RELay {1|2}			
[:STATe] <bool>	Controls the general-purpose signal output (J3-1 and J3-6 terminals).	Yes	REL{1|2}[?]
:MODE?	Queries the operation mode.		MODE?
[SOURce]			
:CURRent			
[:LEVel]			
[:IMMediate]			
[:AMPLitude] <NRf+>	Sets the output current.	Yes	PC[?]
:TRIGgered[:AMPLitude] <NRf+>	Sets the trigger output current.	Yes	-
:MODE <CRD>	Selects the advanced output programmable function mode for current output.	Yes	-
[SOURce]			
:VOLTage			
[:LEVel]			
[:IMMediate]			
[:AMPLitude] <NRf+>	Sets the output voltage.	Yes	PV[?]
:TRIGgered[:AMPLitude] <NRf+>	Sets the trigger output voltage.	Yes	-
:PROTection			
:LEVel <NRf+>	Set the OVP value.	Yes	OVP[?], OVM
:LOW	Sets the UVL and UVP voltage.	Yes	
:STATe <CRD>	Sets UVL or UVP mode (undervoltage limit or protection).	Yes	UV?
:[LEVel] <NRF+>	Sets the UVP/UVL value.		UVP, UVL
:MODE <CRD>	Selects the advanced output programmable function mode for current voltage.	Yes	-

SCPI command	Description	Query Available	PAG Command
[SOURce]			
:LIST			
:COUNt <NRf+>	Sets the number of times to execute the sequence.	Yes	-
:CURRent <NRf+> {<NRf+>}	Sets output current for a step-transition sequence.	Yes	-
:LOAD <NR1>	Recalls LIST sequence data.		-
:STEP <CRD>	Sets the operation to perform when a trigger signal is received.	Yes	-
:STORe <NR1>	Saves the LIST sequence data set last in the specified memory area.		-
:DWEL <NRf+> {<NRf+>}	Sets the step transition interval.	Yes	-
:VOLTage <NRf+> {<NRf+>}	Sets output voltages for a step-transition sequence.	Yes	-
[SOURce]			
:WAVE			
:COUNt <NRf+>	Sets the number of times to execute the sequence.	Yes	-
:CURRent <NRf+> {<NRf+>}	Sets output current for a ramp-transition sequence.	Yes	-
:LOAD <NR1>	Recalls WAVE sequence data.		-
:STEP <CRD>	Sets the operation to perform when a trigger signal is received.	Yes	-
:STORe <NR1>	Saves the WAVE sequence data set last in the specified memory area.		-
:TIME <NRf+> {<NRf+>}	Sets the ramp transition time.	Yes	-
:VOLTage <NRf+> {<NRf+>}	Sets output voltages for a ramp-transition sequence.	Yes	-
STATus			
:OPERation			
[:EVENt]?	Queries the event register value of the OPERation status register.		SEVE?
:CONDition?	Queries the condition (CONDition) register value of the OPERation status register.		STAT?
:ENABle <NRf>	Sets the enable register value of the OPERation status register.	Yes	SENA[?]
:QUEStionable			
[:EVENt]?	Queries the event register value of the QUEStionable status register.		FEVE?
:CONDition?	Queries the condition (CONDition) register value of the QUEStionable status register.		FLT?
:ENABle <NRf>	Sets the enable register value of the QUEStionable status register.	Yes	FENA[?]
SYSTem			
:ERRor:ENABle	Clears the error queue to allow all error messages to be placed in the system error queue.		-
:ERRor?	Queries the error number and error message.		-
:LANGuage <CRD>	Sets commands language.	Yes	-
:REMote			
[:STATe] <CRD>	Sets local or remote mode.	Yes	RMT[?]
:VERSion?	Queries the software version information.		VER?
:DATE?	Queries the last calibration date.		DATE?
:PON			
:TIME?	Queries the accumulated operation time since the POWER switch was first turned on.		-

SCPI command	Description	Query Available	PAG Command
TRIGger			
[:STARt]	Enables the trigger subsystem.		-
:DELay <NRf+>	Sets the delay time from when a trigger is detected until the PAV output setting is changed.	Yes	-
:SOURce <CRD>	Selects the trigger source from the following two options. Bus (*TRG or TRIG) and front panel key Rear panel trigger input terminal	Yes	-
None	Queries the values displayed on the voltmeter and ammeter.		DVC?
None	Queries the PAV status.		STT?
None	Sets the delay time for detecting short-term overcurrents to zero when the foldback protection function is enabled.		FBDRST
None	Sets the operation mode for master-slave parallel operation.	Yes	PMS[?]
None	Sets the SO polarity.	Yes	SOP[?]
None	Sets all settings to factory default settings.		FRST

C Voltage and Current Setting Ranges

NOTE

- The voltage and current can be set 5 % higher than the values in the table, but avoid setting them above the maximum values.
- The OVP value can be set 5 % higher than the rated voltage, but avoid setting it above the maximum value.

- **Voltage setting range**

Rated output voltage (V)	Minimum value (V)	Maximum value (V)
10	00.00	10.00
20		20.00
36		36.00
60		60.00
100		100.0
160	000.0	160.0
320		320.0
650		650.0

- **OVP value setting range**

Rated output voltage (V)	Minimum value (V)	Maximum value (V)
10	0.5	12.0
20	1.0	24.0
36	2.0	40.0
60	5.0	66.0
100	5.0	110
160	5	176
320	5	353
650	5	717

- **UVP/UVL value setting range**

Rated output voltage (V)	Minimum value (V)	Maximum value (V)
10	0	9.5
20	0	19.0
36	0	34.2
60	0	57/0
100	0	95.0
160	0	152
320	0	304
650	0	617.5

- **Current setting range**

Type	PAV	Minimum value (A)	Maximum value (A)
200W	10-20	00.000	20.00
	20-10		10.00
	36-6		6.000
	60-3.5		3.500
	100-2		2.000
	160-1.3	0.000	1.300
	320-0.65		0.650
	650-0.32		0.320
400W	10-40	00.000	40.00
	20-20		20.00
	36-12		12.00
	60-7		7.000
	100-4		4.000
	160-2.6	0.000	2.600
	320-1.3		1.300
	650-0.64		0.640
600W	10-60	00.00	60.00
	20-30		30.00
	36-18		18.00
	60-10		10.00
	100-6		8.00
	160-4	0.00	4.00
	320-2		2.00
	650-1		1.00
800W	10-72	0.00	72.00
	20-40		40.00
	36-24		24.00
	60-14		14.00
	100-8		8.00
	160-5	0.00	5.00
	320-2.5		2.50
	650-1.25		1.25

D Default Settings

*RST and factory default settings

The *RST and factory default settings are shown below.

Parameter description	Value		Unit	Function
	*RST	Factory default		
OUTP	OFF	OFF	--	Turns output on and off.
OUTP:PON	OFF (SAFE)	OFF (SAFE)	--	Auto/safe start.
OUTP:PROT:FOLD	OFF	OFF	--	Foldback protection.
OUTP:PROT:DEL	0	0	mS	Protection activation delay time.
OUTP:ILC:MODE	OFF	OFF	--	Output on/off control.
OUTP:TTLT:MODE	OFF	OFF	--	Condition for outputting trigger signals.
OUTP:REL {1|2}:STAT	1	1	--	Selects the general-purpose signal output.
VOLT	0	0	V	Sets the output voltage.
VOLT:PROT:LEV	MAX	MAX	V	Sets the OVP value.
VOLT:PROT:LOW:STAT	OFF (UVL)	OFF (UVL)	--	Sets the UVP/UVL value.
VOLT:PROT:LOW	0	0	V	Sets the UVL and UVP voltage.
VOLT:MODE	NONE	NONE	--	Selects the advanced output programmable function mode for current voltage.
CURR	0	MAX	A	Sets the output current.
CURR:MODE	NONE	NONE	--	Selects the advanced output programmable function mode for current output.
TRIG:DEL	0	0	S	Sets the delay time after trigger detection.
TRIG:SOUR	EXT	EXT	--	Trigger source.
LIST:STEP	AUTO	AUTO	--	Sets the operation to perform when a trigger signal is received.
LIST:COUN	1	1	--	The number of times to execute the sequence.
WAVE:STEP	AUTO	AUTO	--	Sets the operation to perform when a trigger signal is received.
WAVE:COUN	1	1	--	The number of times to execute the sequence.
STAT:OPER:ENAB	0	0	--	Sets the enable register value of the OPERation status register.
STAT:QUES:ENAB	0	0	--	Sets the enable register value of the QUEStionable status register.
SYST:REM	LOC	LOC	--	Local or remote mode.

E Processing Time of Commands

The command processing time is the time until the next command is accepted.
The processing times indicated here are typical values. They are not warranted.
The processing times vary depending on the settings and the measurement conditions.
It does not include the response time of the hardware.

Command/Query	RS232/485[1] (ms)	USB (ms)	LAN[2] (ms)	Description
OUTP ON	7	16	8	Set the output on
OUTP OFF	2	9	4	Set the output off
OUTP?	6	15	50	Queries the output state
VOLT <NRf+>	3	10	5	Set the voltage
CURR <NRf+>	3	10	5	Set the current
MEAS:VOLT?	8	18	50	Queries the measured voltage
MEAS:CURR?	8	18	50	Queries the measured current
*IDN?	20	30	50	Queries the device identification
*CLS	150	150	150	Clear status command
WAVE:STOR <NR1>	500	500	500	Store WAVE sequence data

1 Baudrate: 19200 bps
2 At 100BASE-TX Ethernet

F PAG Commands

Overview of PAG series communication commands

The PAV series can use PAG series commands except when the LAN interface is selected.

Address setting

First, you need to set the address *(p.88)* of the PAV that you want to connect to your PC.
ADR <address>

NOTE When you send the address command “ADR n,” the PAV will return “OK” until the processing of other commands have been finished.

Data format

Data bit: 8
Start bits: 1
Stop bits: 1
Parity bit: None

Message terminator

The message terminator is CR “0x0D.” LF “0x0A” will be ignored.

Command repetition

“\” can be used to repeat the previous command.

Checksum

A checksum can be added to the end of commands. A checksum is denoted by “$” followed by a two digit hexadecimal. If a checksum is added to a command or query, its response will also include a checksum. CR is not included between the command and “$.”

Example: STT?$3A STAT?$7B

Command reception confirmation

When the reception of a sent command is confirmed, the PAV returns an “OK” message. If an error is detected, the PAV returns an error message. The PAV returns an error message also when the checksum is not correct.

Backspace

A backspace character (0x08) erases the last character sent to the PAV.

Error messages

The PAV returns error messages for inappropriate commands and programming parameters. For details on programming error messages and command error messages, see the following tables.

■ Programming error messages

Error message	Description
E01	The voltage setting is greater than or equal to the allowable voltage. Ex: The output voltage is set greater than or equal to 105 % of the rating or greater than or equal to 95 % of the OVP voltage setting.
E02	The output voltage is set less than or equal to the UVP/UVL setting.
E04	The OVP voltage is set less than or equal to the allowable voltage. Ex: The OVP is set less than or equal to 5 % of the rated output voltage or set less than or equal to the output voltage setting.
E06	The UVP/UVL is set greater than or equal to the output voltage setting.
E07	An output-on command is received while the output has been shut down due to a fault detection.
E08	The PAV is configured as a slave unit in advanced parallel operation and cannot execute commands.

■ Command error messages

Error message	Description
C01	Invalid command or query
C02	Unknown or insufficient parameter
C03	Invalid parameter
C04	Checksum error
C05	Setting outside the allowable range

Notes

- Commands and parameters use uppercase and lowercase characters.
- For commands that set a value, insert a space between the command and the value (e.g., PV 50).
- For commands that set a value, the value is limited to 12 digits.
- Carriage return code: If only a CR character (ASCII 13) is received, the PAV returns “OK” and “CR.”

Command categories

Commands are divided into the following six categories.

- ID control
- Initialization control
- Output control
- Global control
- Auxiliary control
- Status control

ID control commands

No.	Command	Description
1	IDN?	Queries the model name. (KIKUSUI,PAVX-Y-LAN[1]) one comma, no spaces X=rated voltage, Y=rated current
2	REV?	Queries the software version information.
3	SN?	Queries the serial number. (Up to 12 digits)
4	DATE?	Queries the last calibration date. (yyyy/mm/dd) Date format example: 2014/12/12

1 Only for PAV series with the optional LAN interface

Initialization control commands

No.	Command	Description
1	ADR n	Enter an address number (1 to 31) after “ADR” to specify the PAV to access. If an “ADR n” command is appended to another command and sent, the PAV response may be delayed. Send the other command first, and then send the ADR n command 100 ms to 200 ms later.
2	RST	Reset command. This command resets the PAV safely to the following conditions. • Output voltage setting: 0 • Remote/local: Local lockout • Output current setting: 0 • Self/auto start: Safe start • Output: Off • OVP: Maximum value • FOLD: Off • UVP/UVL: 0 The condition register (FLT and STAT) is updated, but the other registers remain unchanged.
3	RMT n	Sets the PAV to local or remote mode. • RMT 0 (or RMT LOC): Sets the PAV to local mode. • RMT 1 (or RMT REM): Sets the PAV to remote mode. • RMT 2 (or RMT LLO): Sets the PAV to local lockout mode.
4	RMT?	Queries the remote mode condition. • LOC: The PAV is in local mode. • REM: The PAV is in remote mode. • LLO: The PAV is in local lockout mode.
5	\	Repeats the previous command.

Output control commands

No.	Command	Description
1	PV n	Sets the output voltage *(p.82)*. (Up to 12 digits) • Ex: PV 12, PV 012, PV 12.0, PV 012.00
2	PV?	Queries the output voltage setting. Returns character string n as exactly as it was sent with the PV n command. In local mode, the PAV returns the value set from the front panel with a 5-digit number.
3	MV?	Queries the measured output voltage. The PAV returns a 5-digit number. • Ex: For PAV60-14 output: 01.150, 15.012, 50.000
4	PC n [1]	Sets the output current *(p.82)*. (Up to 12 digits) • Ex: PC 10, PC 10.0, PC 010.00
5	PC?	Queries the output current setting. Returns character string n as exactly as it was sent with the PC n command. In local mode, the PAV returns the value set from the front panel with a 5-digit number.
6	MC? [2]	Queries the measured output current. The PAV returns a 5-digit number. • Ex: For PAV10-72 output: 70.000
7	DVC?	Queries the values displayed on the voltmeter and ammeter. Each value is separated by a command and returned in the following order. Output voltage, voltage setting, output current, current setting, OVP setting, UVP/UVL setting • Ex: 5.9999, 0000, 010.02, 010.00, 7.500, 0.000
8	OUT n	Sets the output to on or off. Restores the output from a self start, OVP, or OCP condition. • OUT 1 (or OUT ON): Turns the output on. • OUT 0 (or OUT OFF): Turns the output off.
9	OUT?	Queries the output on/off state. • ON: Output on • OFF: Output off
10	FLD n	Sets the foldback protection to on or off. • FLD 1 (or FOLD ON): Enables the foldback protection. • FLD 0 (or FOLD OFF): Disables the foldback protection. After the foldback protection is activated, sending an OUT 1 command releases the protected state, but the foldback protection setting remains enabled. FLD 0 will disable the protection.
11	FLD?	Queries the foldback protection state. The PAV returns a character string. • ON: Foldback protection is enabled. • OFF: Foldback protection is disabled.
12	FBD nn	Sets the delay time for detecting short-term overcurrents when the foldback protection function is enabled. For nn, you can set a value between 0 and 255. The delay time is (nn x 0.1) seconds. The setting is stored in EEPROM, so the setting will not change even when the PAV is restarted.
13	FBD?	Queries the value specified with No.12.
14	FBDRST	Sets the value specified with No.12 to zero.
15	OVP n	Sets the overvoltage protection (OVP) value *(p.82)*. (Up to 12 digits) The lower OVP setting limit is 105 % of the voltage setting. If you try to set the OVP to a value less than or equal to the lower limit, the PAV returns an execution error (“E04”). If this occurs, the OVP setting will remain unchanged.
16	OVP?	Queries the overvoltage protection (OVP) setting. Returns character string n as exactly as it was sent with the OVP n command. In local mode, the PAV returns the value set from the front panel with a 4-digit number.
17	OVM	Sets the OVP value to the maximum value *(p.82)*.
18	UV?	Queries the present mode (UVP/UVL).

No.	Command	Description
19	UVL n	Sets the undervoltage limit (UVL) value *(p.82)*. Set n to a value no greater than 95 % of the PV (output voltage) setting. If the value is higher than the PV value, the PAV returns “E06.”
20	UVL? 3	Queries the undervoltage limit (UVL) setting. Returns character string n as exactly as it was sent with the UVL n command. In local mode, the PAV returns the value set from the front panel with a 4-digit number.
21	UVP n	Sets the undervoltage protection value *(p.82)*. Set n to a value no greater than 95 % of the PV (output voltage) setting. If the value is higher than the PV value, the PAV returns “E06.”
22	UVP? 3	Queries the undervoltage protection value. Returns character string n as exactly as it was sent with the UVP n command. In local mode, the PAV returns the value set from the front panel with a 4-digit number.
23	AST n	Sets the auto start mode to on or off. AST 1 (or AST ON): Auto start is set to on. AST 0 (or AST OFF): Auto start is set to off.
24	AST?	Queries the auto start mode state. ON: Auto start mode on OFF: Auto start mode off
25	SAV n	Saves the present settings. Set the target memory number using n = 1 to 4.
26	RCL n	Recalls the previous settings. The settings that were used the previous time the AC input was shut off or the settings saved previously with the SAV command are recalled. Set the target memory number using n = 1 to 4.
27	MODE?	Queries the operation mode. The PAV returns “CV” or “CC” when the output is on (OUT 1) or “OFF” when the output is off (OUT 0).
28	PMS n	Sets the operation mode for master-slave parallel operation. • Master unit: Set using n = H1 to H6. • Slave unit: n = SL (basic), ADSL (advanced)
29	PMS?	Queries the master/slave state in master-slave parallel operation. • Master unit: Returns n = H1 to H6. • Slave unit: Returns n = S (basic), AD (advanced)

1 When the current of the entire system is being shown on the master unit, n is the total current of the entire system.
2 When the current of the entire system is being shown on the master unit, the response to MC? is the product of the output current of the master unit and the number of PAVs in the system (master and slaves).
3 The PAV returns “C01” in response to “UVL?” if it is set to UVP. Likewise, the PAV returns “C01” in response to UVP? if it is set to UVL.

Global commands

Global commands are used to execute the same command on all PAVs connected via the RS485 bus. Global commands affect even those PAVs that do not have addresses assigned to them. Individual PAVs do not respond to global commands.

After sending a command, 20 ms is required for each PAV to start the corresponding operation. To send commands consecutively, allow 20 ms between each command. Even if a command is invalid, PAVs will not return error messages.

No.	Command	Description
1	GRST	Reset command. Sets the PAV in the following state. Output voltage: 0 V, output current: 0 A, output: Off, remote mode: RMT 1, start mode: safe start, OVP: maximum value, UVP/UVL: 0 The condition register (FLT and STAT) will be updated. Other registers will remain unchanged. Faults whose protection is no longer activated (foldback, OVP, SO, and UVP) will be cleared. OUT fault will not change.
2	GPV n	Sets the output voltage *(p.82)*. (Within the rated range, up to 12 digits including the decimal point)
3	GPC n	Sets the output current *(p.82)*. (Within the rated range, up to 12 digits including the decimal point)
4	GOUT	Sets the output to on or off. • GOUT ON (or GOUT 1): Turns the output on. • GOUT OFF (or GOUT 0): Turns the output off. However, even when OUT ON is sent, if the PAV is in a state in which the output cannot be turned on (OTP, ENA, SO, etc.), the PAV returns “E07.”
5	GSAV n	Saves the present settings to the specified memory area (n = 1 to 4).
6	GRCL n	Recalls settings from memory (n = 1 to 4).

Auxiliary commands

No.	Command	Description
1	SOP	Sets the SO polarity. SO 1/ON: positive SO 0/OFF: negative.
2	SOP?	Queries the SO polarity.
3	RIE	Sets the output on/off control. RIE 1/ON: Allow RIE 0/OFF: Prohibit
4	RIE?	Queries the output on/off control state. ON: Allow OFF: Prohibit
5	FRST	Factory reset command. This command returns all settings to their factory defaults *(p.84)*.
6	MP?	Queries the output power. The PAV returns a 5-digit number.
7	REL1	Sets general-purpose signal output 1 (J3-1). REL1 1/ON: High REL1 0/OFF: Low
8	REL1?	Queries the general-purpose signal output 1 (J3-1) state.
9	REL2	Sets general-purpose signal output 2 (J3-6). REL2 1/ON: High REL2 0/OFF: Low
10	REL2?	Queries the general-purpose signal output 2 (J3-6) state.

Status control commands

For register definitions, see “Condition register” *(p.57)*.

No.	Command	Description
1	STT?	Queries the PAV state. The PAV returns an ASCII character string containing the following values. Each value is separated by a comma. • MV<measured voltage> • PC<current setting> • PV<voltage setting> • SR<status register, 4-digit hexadecimal> • MC<measured current> • FR<fault register, 4-digit hexadecimal> Response example: MV(650.05), PV(650.05), MC(2.6000), PC(2.6500), SR(0030), FR(0000)
2	FLT?	Queries the fault condition register. The PAV returns a 4-digit hexadecimal number.
3	FENA	Sets the fault enable register using a 4-digit hexadecimal number.
4	FENA?	Queries the fault enable register. The PAV returns a 4-digit hexadecimal number.
5	FEVE?	Queries the fault event register. The PAV returns a 4-digit hexadecimal number. Clears the fault event register bits.
6	STAT?	Queries the status condition register. The PAV returns a 4-digit hexadecimal number.
7	SENA	Sets the status enable register using a 4-digit hexadecimal number.
8	SENA?	Queries the status enable register. The PAV returns a 4-digit hexadecimal number.
9	SEVE?	Queries the status event register. The PAV returns a 4-digit hexadecimal number. Clears the status event register bits.

G Installing KI-VISA

KI-VISA is an original VISA library developed by Kikusui Electronics Corporation that supports the VXIplug&play VISA specifications. It is included on the CD. You can also download the most recent version of this library from the Kikusui Electronics Corporation website (http://www.kikusui.co.jp/en/download/).

NOTE Do not install KI-VISA in a PC that already has a VISA driver from another company installed. Doing so may cause the various VISA drivers to malfunction.

1 Put the included CD-ROM into the PC's CD-ROM drive.

In a few moments, a start window will appear. If the start window does not appear, open the CD-ROM folder in Windows Explorer, and then double-click index.html to display the start window.

2 Click KI-VISA.

The "kivisa _x_x_x.exe" file on the CD-ROM will be displayed on the screen. The string "x_x_x" indicates the version.

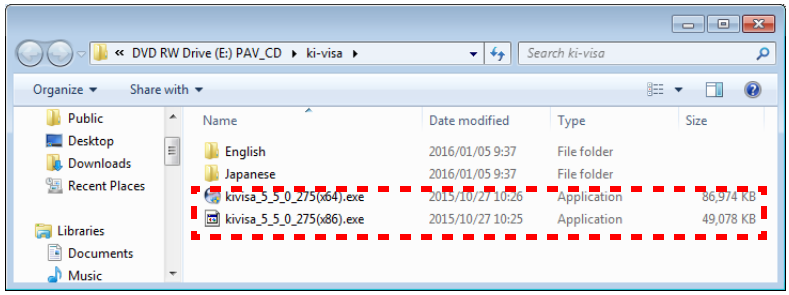

3 On a 32-bit OS, install KI-VISA_x_x_x_(x86). On a 64-bit OS, install KI-VISA_x_x_x_(x64).

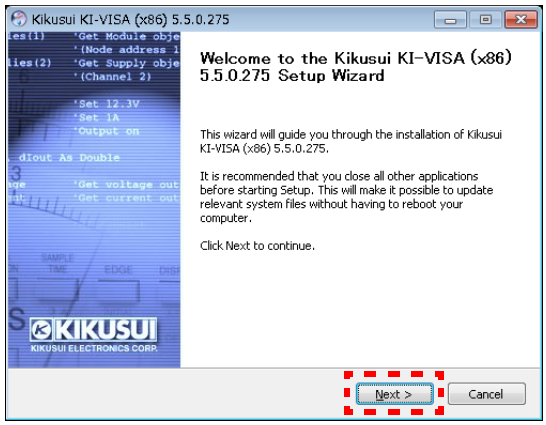

4 **Proceed with the installation according to the instructions on the screen.**

During the KI-VISA installation, IVI Shared Components and other Shared Components of IVI Foundation are also installed.

When the installation is complete, the following dialog box appears.

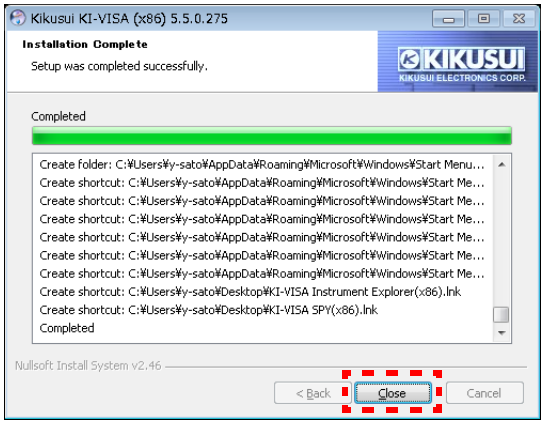

Kikusui KI-VISA (x86) 5.5.0.275

Installation Complete

Setup was completed successfully.

Completed

```
Create folder: C:¥Users¥y-sato¥AppData¥Roaming¥Microsoft¥Windows¥Start Menu...
Create shortcut: C:¥Users¥y-sato¥AppData¥Roaming¥Microsoft¥Windows¥Start Me...
Create shortcut: C:¥Users¥y-sato¥AppData¥Roaming¥Microsoft¥Windows¥Start Me...
Create shortcut: C:¥Users¥y-sato¥AppData¥Roaming¥Microsoft¥Windows¥Start Me...
Create shortcut: C:¥Users¥y-sato¥AppData¥Roaming¥Microsoft¥Windows¥Start Me...
Create shortcut: C:¥Users¥y-sato¥AppData¥Roaming¥Microsoft¥Windows¥Start Me...
Create shortcut: C:¥Users¥y-sato¥AppData¥Roaming¥Microsoft¥Windows¥Start Me...
Create shortcut: C:¥Users¥y-sato¥Desktop¥KI-VISA Instrument Explorer(x86).lnk
Create shortcut: C:¥Users¥y-sato¥Desktop¥KI-VISA SPY(x86).lnk
Completed
```

5 **Click Close.**

Index

A

address setting 86
advanced output programmable function 64

B

backspace 87
baudrate 8
boolean data 25

C

character data 25
checksum 86
command
    hierarchy 22
    syntax 23
Command language 8
command reception confirmation 86
command repetition 86
condition register 58

D

data format 86
default settings 84

E

enable register 58
event register 58

F

factory default settings 84
fault register 57
FIX mode 65
foldback protection 30

G

global commands 54, 91

L

LIST mode 66
local lockout mode 9
local mode 9

M

message terminator 86
messages 22

N

NRf 25
NRf+ 25

O

OVP 35, 89

P

PAG series commands 86

Q

queries 24

R

remote mode 9
resetting, settings after 84

S

sequence function 64
status byte register 60
status register 58

U

UVL 36, 90
UVP 36, 90

W

WAVE mode 67

This page has been intentionally left blank.

If you find any misplaced or missing pages in the manuals, they will be replaced. If the manual gets lost or soiled, a new copy can be provided for a fee. In either case, please contact your Kikusui agent or distributor. At that time, inform your agent or distributor of the “Part No.” written on the front cover of this manual.

Every effort has been made to ensure the accuracy of this manual. However, if you have any questions or find any errors or omissions, please contact your Kikusui agent or distributor.

After you have finished reading this manual, store it so that you can use it for reference at any time.

KIKUSUI ELECTRONICS CORP.

1-1-3 Higashiyamata, Tsuzuki-ku, Yokohama,
224-0023, Japan
Tel: +81-45-593-7570 Fax: +81-45-593-7571

Website http://www.kikusui.co.jp/en