INSTRUCTION MANUAL

CRT READOUT OSCILLOSCOPE / DIGITAL OSCILLOSCOPE

MODELS

COM7200A	COM7201A
COM7100A(AGP)	COM7101A
COM7060A(AGP)	COM7061A

Second Edition

Notes for Versions

This manual is for the instruments of Version V-M3.0 and above, which are with the following changes over the instruments of Version V-M2.3 and below. Refer to Section 7.2.

Sine interpolation : Instead of the SIN X/X filter interpolation, a spline interpolation with polynominals is employed.

Triggering point position (storage mode): Uncertainty errors within one-sampling section may occur at the high sweep speed ranges in the single-shot mode.

KIKUSUI ELECTRONICS CORPORATION

8941160B

Power Requirements of this Product

Power requirements of this product have been changed and the relevant sections of the Operation Manual should be revised accordingly.
(Revision should be applied to items indicated by a check mark ☑.)

☐ Input voltage

The input voltage of this product is _____ VAC,
and the voltage range is _____ to _____ VAC. Use the product within this range only.

☐ Input fuse

The rating of this product's input fuse is _____A, _____VAC, and _____.

WARNING

- To avoid electrical shock, always disconnect the AC power cable or turn off the switch on the switchboard before attempting to check or replace the fuse.
- Use a fuse element having a shape, rating, and characteristics suitable for this product. The use of a fuse with a different rating or one that short circuits the fuse holder may result in fire, electric shock, or irreparable damage.

☐ AC power cable

The product is porvided with AC power cables described below. If the cable has no power plug, attach a power plug or crimp-style terminals to the cable in accordance with the wire colors specified in the drawing.

WARNING

- The attachment of a power plug or crimp-style terminals must be carried out by qualified personnel.

☐ Without a power plug

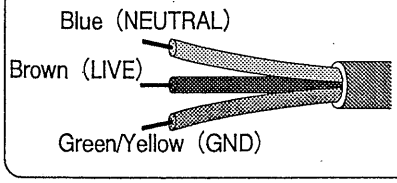

☐ Without a power plug

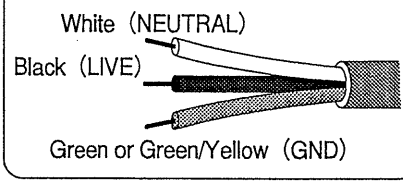

☐ Plugs for USA

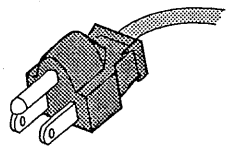

☐ Plugs for Europe

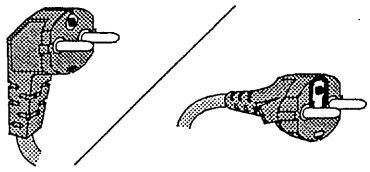

☐ Provided by Kikusui agents

Kikusui agents can provide you with suitable AC power cable.
For further information, contact your Kikusui agent.

☐ Another Cable _____

© 1998 Kikusui Electronics Corporation Kikusui Part No. Z9-000-027 IB001681

KIKUSUI

TABLE OF CONTENTS

	PAGE
1. GENERAL	1-1
1.1 Description	1-1
1.2 Features	1-2
2. SPECIFICATIONS	2-1
3. PRECAUTIONS BEFORE OPERATING THE OSCILLOSCOPE	3-1
3.1 Unpackng the oscilloscope	3-1
3.2 Environments	3-1
3.3 CRT Intensity	3-1
3.4 Maximum Safe Input Voltages	3-1
4. OPERATING	4-1
4.1 Description of Front Panel	4-1
4.2 Description of Front Panel (for Storage Mode)	4-21
4.3 Description of Rear Panel	4-30
* Front Panel of COM7200A	4-32
* Front Panel of COM7201A	4-33
* Rear Panel	4-34
4.4 Description of CRT Readout	4-35
4.5 Initial Setting	4-40
4.6 Calibration of Probes	4-41
4.7 To Change Readout Factor for Probe	4-43
4.8 Beam Finder	4-43
4.9 2-channel Mode	4-43
4.10 ADD Mode	4-44
4.11 X-Y Mode	4-45
4.12 3-channel or 4-channel Mode	4-45
4.13 Voltage Measurement	4-46
4.14 Voltage Ratio Measurement	4-48
4.15 Time Interval Measurement	4-49
4.16 Time Ratio Measurement	4-50
4.17 Frequency Measurement	4-51
4.18 Measurement of Phase Difference	4-52
4.19 Delayed Sweep	4-53
4.20 Time Interval Measurement with Delayed Sweeps	4-56

'90. 8. 31

8941161A

PAGE

5. STORAGE MODE 5-1
5.1 Storage Operation 5-1
5.2 Effective Storage Frequency and Frequency Bandwidth 5-12
5.3 ΔT, 1/ΔT and ΔV Measurement with Cursors 5-16
5.4 DVM and Frequency Counter 5-16
5.5 Delayed Sweep 5-16
5.6 PENOUT Signal 5-17

6. GP-IB INTERFACE 6-1
6.1 General 6-1
6.2 GP-IB Specifications 6-3
6.2.1 Standards 6-3
6.2.2 Interface Functions 6-3
6.3 Descriptions for Operation 6-4
6.3.1 Remote Status and Local Status 6-4
(1) Eescription of Front Panel and Initial States of Remote mode 6-4
(2) Description of Rear Panel and Setting of Delimiters 6-7
(3) Derice Functions 6-10
6.3.2 Command and Date Formats 6-12
(1) Command Format 6-12
(2) Waveform Date Formats and Blocks 6-13
(3) Delimiters 6-14
(4) Abbreviations of Commands 6-14
(5) SRQ and Status Byte 6-15
6.3.3 Date Send/Receive Sequence 6-17
6.4 Table of Commands 6-19
6.4.1 System Commands 6-22
6.4.2 Commands for vertical Axis 6-24
6.4.3 Commands for Time Base (Horizontal Axis) 6-28
6.4.4 Commands for Triggering 6-32
6.4.5 Commands for Cursors 6-36
6.4.6 Commands for DVM and Counter 6-38
6.4.7 Commands for Step Control 6-39
6.4.8 Commands for Probe Selector Control 6-40
6.4.9 Commands for Storage 6-41

'90. 8. 31

89116 2A

PAGE

6.5 Output for GP-IB Plotter 6-47
6.6 Programming Examples 6-49
6.6.1 Examples of Programming for IBM Personal Computers and compactibles 6-49
(1) Initial Setting 6-49
(2) Programming Example for Panel Control 6-50
(3) Programming Examples to Read Panel Setting and Measured Values 6-52
(4) Programming Examples to Set Panel Controls and Read Setting Values 6-54
(5) Examples of Commands for Control of Cursors and Reading of Measured Values 6-56
(6) Examples of Commands for Control of DVM and Counter, and Reading of Measured Values 6-56
(7) Examples of Reading of Measured Values by Status Byte observation 6-57
(8) Examples of Programs for Transfer of Waveform Data 6-59
(9) Step Control 6-63
(10) Example of SINGLE TRIGGER STANDBY by SRQ Processing 6-65
6.6.2 Examples of Programming for Model 9826 Computer of HP 6-67
(1) Initial Setting 6-67
(2) Programming Example for Panel Control 6-67
(3) Programming Examples to Read Panel Setting and Measured Values 6-69
(4) Programming Example to Set Panel Controls and to Read Setting Values 6-71
(5) Examples of Commands for Control of Cursors and Reading of Measured Values 6-73
(6) Examples of Commands for Control of the DVM and Counter, Reading of Measured Values 6-73
(7) Example of Reading the Measured Data by Status Byte or SRQ 6-74
(8) Examples of Programs for Transfer of Waveform Data 6-77
(9) Step Control 6-79
(10) Example of SRQ Proceesing 6-81

7. INITIAL MODE SETTING AND DIAGNOSTIC FUNCTION 7-1
7.1 Initial Mode Setting 7-1

'90. 8. 31

894163A

PAGE

7.2 Diagnostic Function 7-2

8. CALIBRATION AND MAINTENANCE 8-1

8.1 Self Calibration 8-1

8.2 Inspection and Calibration 8-2

8.3 Calibration Procedure 8-2

'90. 8. 31

90742

1. GENERAL

1.1 Description

The COM7XXXA Series Oscilloscopes have been designed on new and advanced concepts for accurate, reliable, and easy ways of man-machine communication.

The COM7XXXA family is comprised of the following types and models of oscilloscopes:

Types	Models
CRT readout oscilloscopes	COM7200A, COM7100A, COM7060A
Programmable oscilloscopes with GP-IB provision	COM7100AGP, COM7060AGP
Digital oscilloscopes with digital storage function and GP-IB provision	COM7201A, COM7101A, COM7061A

As can be seen in the above listing, suffix "GP" denotes existence/absence of the GP-IB provision. The least significant column ("1"/"0") of the model-number numerals denotes existence/absence of both digital storage function and GP-IB provision at once. Otherwise the oscilloscopes are identical regardless of their type differences, so far as the corresponding model number columns are identical.

The COM7200A has a frequency bandwidth of DC to 200MHz, a maximum deflection factor 1 mV/DIV, and highest sweep rate 1 ns/DIV; the COM7100A has a frequency bandwidth of DC to 100 MHz, a maximum deflection factor of 1 mV/DIV, and highest sweep rate of 2 ns/DIV; the COM7060A has a frequency bandwidth of DC to 60 MHz, a maximum deflection factor of 1 mV/DIV, and highest sweep rate of 5 ns/DIV.

894164

1.2 Features

The features of the COM7200A representing the CRT readout oscilloscopes and the COM7201A representing the digital oscilloscopes are as follows.

A. Features of COM7200A/COM7201A

(1) CRT readout

Various items of information concerning measurement, together with the signal waveform to be measured, are displayed on the CRT for accurate and rapid measurement. The displayed items include the vertical deflection factor, input coupling mode, timebase sweep rate and delay time, and the value determined between cursors and the values measured by the internal voltmerer and frequency counter.

(2) 4-channel display

The oscilloscope employs a multi-mode select system which allows you to select any combination of the four channels. All of the four channels provide the specified highest frequency range either at the BNC input terminals or at the probe tips.

(3) Measurement with cursors

Two cursors are displayed on the CRT. As you move these cursors to the points of measurement, the differential voltage, period or phase between the two points is automatically determind and readout displayed on the CRT, eliminating the chance of human reading error and calculation mistakes. When in the tracking mode the two cursors can be translated keeping the distance between them constant, allowing you to compare amplitudes and periods very conveniently.

8941165

(4) Functions of digital voltmeter and frequency counter

The oscilloscope has a digital voltmeter circuit and a frequency counter circuit. The digital voltmeter is a 3-1/2-digit digital multimeter which measures the DC voltage, AC rms voltage or peak-to-peak voltage of the signal applied to the input terminal of channel 1.
The frequency counter is a 4-digit auto-range counter which measures the frequency of the trigger signal selected by the trigger source switch. The measured values are displayed on the CRT.

(5) Full employment of IC's and calibration verification feature

A number of newly developed IC's are employed for most part of the major circuits of the oscilloscope, thereby reducing the number of discrete components to the minimum and improving the reliability and maintainability. The circuits are self-calibrated for reliable measurement.

(6) Ease of operation

The panel switches and controls are laid out for most efficient and easy operation. The major functions are selectable by simple operation of individual switches, while less frequently used switches and controls are collectively located and classified by the natures of their functions, thereby making the instrument panel neat and highly functional.

(7) Memory for panel setting

All data of the panel settings are stored in the internal memory of the oscilloscope and are not lost even when the power is turned off. When the power switch is turned on again, the panel settings are automatically restored releaving you from resetting the panel controlls each time the power switch is turned on.

89 4166

(8) Compact and light

The oscilloscope is very compact and light for its high performance and reliability. It is 31.8 cm (12.5 in.) wide, 15.0 cm (5.91 in.) high, 40.0 cm (15.7 in.) deep, and weighs 8 kg (18 lbs) for COM7200A or 10 kg (22 lbs) for COM7201A.

(9) 50-ohm input circuits

The input impedance of channels 1 and 2 of COM7200A/COM7201A is selectable between 1 meg-ohms and 50 ohms. The 50-ohm input circuits are incorporated with an overvoltage protector.

(10) CRT with bright and sharp images

All of the COM7XXXA Series Oscilloscopes employ a 20-kV CRT that display bright and sharp images even for rapidly changing phenomena.

(11) On any line voltage

The COM7XXXA Series Oscilloscopes operate on any AC line voltage within a range of 90 to 250 V AC without requiring any switching procedure. Since they employ no large power transformer, they are compact and light.

(12) Automatic triggering level control, requiring no manual adjustment

(13) 4-channel alternate triggering, allowing successful triggering of input signals of different frequencies

(14) A TV synchronizing separator for TV.V or TV.H selection

(15) A linear focus control circuit, requiring no manual focus adjustment each time intensity is varied

(16) 3-channel X-Y operation

8941697

B. Features of COM7201A, COM7101A, COM7061A (Digital Storage Section)

(17) Sampling rate up to 50 MS/sec

The maximum sampling rate is as fast as 50 MS/sec and the vertical resolution is as high as 8 bits, allowing you to capture one-shot phenomena of up to 14 MHz. The COM7061A provides a maximum sampling rate of 20 MS/sec and vertical resolution of 8 bits, allowing you to capture one-shot phenomena of up to 5.7 MHz.

(18) Digitizing of signals of up to 100 MHz

In the equivalent sampling mode, signals of up to 100 MHz can be successfully captured. The equivalent sampling rate in this case is as high as 10 GS/sec. (COM7201A)
The COM7061A is able to capture signals of up to 60 MHz.

(19) Envelope mode to detect one-shot glitches as fast to 20 ns

The oscilloscope has a peak-value detector circuit which is able to capture a pulse of narrow duration of down to 20 ns within a sampling clock period and to display the maximum and minimum values. Thus the circuit allows detection of narrow pulses involved in a slowly changing repetitive signal and, even when the input signal frequency has become higher than one-half of the sampling frequency, aliasing that may cause measuring errors can be discriminated.

(20) Reference memory to store up to four waveforms

The storage section has a reference memory (other than the display memory) for up to four waveforms which can be re-written as required. The reference memory is internally backed up and the stored data can be maintained for a long period.

(21) GP-IB interface functions

The oscilloscope is compatible with the GP-IB interface system, allowing programmed remote control of the oscilloscope and transfer of status data displayed on the CRT readout or waveform data stored in memory. A hardcopy of data can be readily obtained by calling out a

'90. 8. 31

8941168A

GP-IB plotter with a HP-GL command.

(22) Various functions with digital storage

Various advantageous functions are realized with the digital storage, such as pretriggering for viewing of signal waveform preceding the trigger point, interpolation which provides a convenient means for measurement of high-speed one-shot phenomenon, expansion of time base up to 100 times for stored signal magnification, roll mode which is convenient for monitoring of a low-speed continuous signal, and delayed magnification which allows high speed sampling of any portion of a signal sampled at a slow rate.

(23) Programmable oscilloscope

By using Remote Controller RC01-COM, the oscilloscope can be used as a programmable instrument. Up to 100 items of panel settings can be programmed and called by simple panel key operation.

By using Probe Selector PS01-COM, up to 16 probes (8 probes for each of CH1 and CH2) can be connected to the oscilloscope making up an instrument of 16 input channels. The probes are selectable with the Remote Controller.

89 4169

2. SPECIFICATIONS

o Vertical Axes

Item	Specification	Remarks
CH1, CH2		
Deflection Factor	1 mV/DIV to 5 V/DIV	1-2-5 sequence, 12 ranges
Accuracy of Deflection Factor	5 mV/DIV to 5 V/DIV: ±2% 1 mV/DIV and 2 mV/DIV: ±4%	15 to 35°C (59 to 95°F), 1 kHz, 4 - 5 DIV reference
Vernier Control of Deflection Factor	Continuously variable attenuation to 1/2.5 or less of set value	
Frequency Bandwidth	COM7201A, COM7200A DC - 200 MHz, within -3 dB DC - 50 MHz, within -3 dB (1 mV/DIV, 2 mV/DIV) Low limit frequency of AC coupling: 10 Hz	50 kHz, 8 DIV reference 15 to 35°C (59 to 95°F) COM7201A: When in real mode
	COM7101A, COM7100A DC - 100 MHz, within -3 dB DC - 30 MHz, within -3 dB (1 mV/DIV, 2 mV/DIV) Low limit frequency of AC coupling: 10 Hz	50 kHz, 8 DIV reference 15 to 35°C (59 to 95°F) COM7101A: When in real mode
	COM7061A, COM7060A DC - 60 MHz, within -3 dB DC - 30 MHz, within -3 dB (1 mV/DIV, 2 mV/DIV) Low limit frequency of AC coupling: 10 Hz	50 kHz, 8 DIV reference 15 to 35°C (59 to 95°F) COM7061A: When in real mode
Input Impedance	COM7201A, COM7200A 1 MΩ ±1%, 18 pF ±3 pF, 50 Ω ±2% COM7101A, COM7100A, COM7061A, COM7060A 1 MΩ ±1%, 20 pF ±3 pF	

891170

Item	Specification	Remarks
CH3, CH4		
Deflection Factor	0.1 V/DIV, 0.5 V/DIV	2 ranges
Accuracy of Deflection Factor	±5%	15 to 35°C (59 to 95°F), 1 kHz, 4 - 5 DIV reference
Frequency Bandwidth	COM7201A, COM7200A DC - 200 MHz, within -3 dB Low limit frequency of AC coupling: 10 Hz	50 kHz, 8 DIV reference 15 to 35°C (59 to 95°F) COM7201A: When in real mode
	COM7101A, COM7100A, DC - 100 MHz, within -3 dB Low limit frequency of AC coupling: 10 Hz	50 kHz, 8 DIV reference 15 to 35°C (59 to 95°F) COM7101A: When in real mode
	COM7061A, COM7060A DC - 60 MHz, within -3 dB Low limit frequency of AC coupling: 10 Hz	50 kHz, 8 DIV reference 15 to 35°C (59 to 95°F) COM7061A: When in real mode
Input Impedance	COM7201A, COM7200A 1 MΩ ±1%, 18 pF ±3 pF COM7101A, COM7100A, COM7061A, COM7060A 1 MΩ ±1%, 20 pF ±3 pF	
Maximum Safe Input Voltage	1 MΩ circuit: 400 Vpeak (DC + AC peak) 50 Ω circuit (CH1 and CH2 only of COM7201A, COM7200A): 5V (with overvoltage protector)	AC components not higher than 1 kHz
Input Coupling	AC , GND , DC	
Rise Time	COM7201A, COM7200A Approx. 1.75 ns Approx. 7 ns (1 mV/DIV, 2 mV/DIV)	Theoretical values When in real mode
	COM7101A, COM7100A Approx. 3.5 ns Approx. 11.7 ns (1 mV/DIV, 2 mV/DIV)	Theoretical values When in real mode

89 4171

Item	Specification	Remarks
Rise Time (cont'd)	COM7061A, COM7060A Approx. 5.8 ns Approx. 11.7 ns (1 mV/DIV, 2 mV/DIV)	Theoretical values When in real mode
Channel Modes	CH1, ADD (CH1 + CH2), CH2 CH3, CH4 Any combination of the above channels in a multi-mode select system. X-Y display with CH1 as X and any one or ones of CH2, CH3 and CH4 as Y.	
Time Difference Among Channels	< ±500 ps (of all channels)	(Except 1 mV/DIV, 2 mV/DIV ranges)
Signal Delay Time	Approx. 40 ns	
Chop Frequency	Approx. 1 MHz	
Bandwidth Limiter	20 MHz ±5 MHz, -3 dB	
Polarity Select	For CH2 only	
CH1 Signal Output	Approx. 50 mV/DIV when output terminal is open	
	Approx. 25 mV/DIV when output terminal is terminated with 50 Ω	COM7201A, COM7200A COM7101A, COM7100A DC - 100 MHz -3dB. COM7061A, COM7060A DC - 60 MHz -3dB.

89417 2

o Triggering

Item	Specification	Remarks
A Trigger		
Triggering Signal Sources	CH1, CH2, CH3, CH4, LINE, and V-MODE (When in V-MODE, channels operating in VERT mode are used as signal sources. When in ADD mode, CH1 is used as signal source. When in CHOP mode or AUTO LEVEL mode, the leftmost one of the operating channels indicated by VERT mode lamps on panel is used as signal source.)	V-MODE is effective when in ALT SWEEP mode or SINGLE SWEEP mode or when AUTO LEVEL mode is released.
Coupling	AC, LF•REJ, HF•REJ, DC, TV•V, and TV•H	
Polarity	+ or -	
Sensitivity	COM7201A, COM7200A DC - 10 MHz: 0.4 DIV DC - 200 MHz: 1.5 DIV TV•V, TV•H: 1.0 DIV AC: Attenuates signal components of 10 Hz and lower LF•REJ: Attenuates signal components of 50 kHz and lower HF•REJ: Attenuates signal components of 50 kHz and higher	TV•V, TV•H: When in NTSC full field color bar signal
	COM7101A, COM7100A DC - 10 MHz: 0.4 DIV DC - 100 MHz: 1.5 DIV TV•V, TV•H: 1.0 DIV AC: Attenuates signal components of 10 Hz and lower	TV•V, TV•H: When in NTSC full field color bar signal

8941173

Item	Specification	Remarks
Sensitivity (cont'd)	LF•REJ: Attenuates signal components of 50 kHz and lower HF•REJ: Attenuates signal components of 50 kHz and higher	
	COM7061A, COM7060A DC - 10 MHz: 0.4 DIV DC - 60 MHz: 1.5 DIV TV•V, TV•H: 1.0 DIV AC: Attenuates signal components of 10 Hz and lower LF•REJ: Attenuates signal components of 50 kHz and lower HF•REJ: Attenuates signal components of 50 kHz and higher	TV V, TV H: When in NTSC full field color bar signal
AUTO LEVEL	Satisfies the above values with 0.5 DIV added to each of them	For sinusoidal waves
Modes	AUTO: When no triggering signal is applied, sweep runs automatically. NORM: When no triggering signal is applied, sweep is in a ready state and does not run. SINGLE: When triggering signal is applied, sweep runs only once. When RESET key is pressed, sweep is reset to READY state. When in READY state or sweeping, READY lamp illuminates.	When in real mode of COM7201A, COM7101A, COM7061A

89411174

Item	Specification	Remarks
B Trigger		
Triggering Signal Sources	CH1, CH2, CH3, CH4, and V-MODE (When in V-MODE, channels operating in VERT mode are used as signal sources. When in ADD mode, CH1 is used as signal source. When in CHOP mode or AUTO LEVEL mode, the leftmost one of the operating channels indicated by VERT mode lamps on panel is used as signal source.)	V-MODE is effective when in ALT SWEEP mode or SINGLE SWEEP mode or when AUTO LEVEL mode is released.
Coupling	AC, LF•REJ, HF•REJ, and DC	
Polarity	+ or -	
Sensitivity	COM7201A, COM7200A DC - 10 MHz: 0.4 DIV DC - 200 MHz: 1.5 DIV AC: Attenuates signal components of 10 Hz and lower LF•REJ: Attenuates signal components of 50 kHz and lower HF•REJ: Attenuates signal components of 50 kHz and higher	
	COM7101A, COM7100A DC - 10 MHz: 0.4 DIV DC - 100 MHz: 1.5 DIV AC: Attenuates signal components of 10 Hz and lower LF•REJ: Attenuates signal components of 50 kHz and lower HF•REJ: Attenuates signal components of 50 kHz and higher	

89 41 75

Item	Specification	Remarks
Sensitivity (cont'd)	COM7061A, COM7060A DC - 10 MHz: 0.4 DIV DC - 60 MHz: 1.5 DIV AC: Attenuates signal components of 10 Hz and lower LF•REJ: Attenuates signal components of 50 kHz and lower HF•REJ: Attenuates signal components of 50 kHz and higher	
AUTO LEVEL	Satisfies the above values with 0.5 DIV added to each of them	For sinusoidal waves

89476

o Time Base (Horizontal Axis)

Item	Specification	Remarks
A Sweep		
Sweep Speeds	COM7201A Real mode: 10 ns/DIV - 0.5 s/DIV Storage mode: 10 ns/DIV - 5 s/DIV	1-2-5 sequence
	COM7200A 10 ns/DIV - 0.5 s/DIV	1-2-5 sequence
	COM7101A Real mode: 20 ns/DIV - 0.5 s/DIV Storage mode: 20 ns/DIV - 5 s/DIV	1-2-5 sequence
	COM7100A 20 ns/DIV - 0.5 s/DIV	1-2-5 sequence
	COM7061A Real mode: 50 ns/DIV - 0.5 s/DIV Storage mode: 50 ns/DIV - 5 s/DIV	1-2-5 sequence
	COM7060A 50 ns/DIV - 0.5 s/DIV	1-2-5 sequence
Accuracy of Sweep Speeds	±2%	15 to 35°C (59 to 95°F). Accuracy for 8 DIV at center of CRT
Vernier Control of Sweep Speeds	Continuously variable to a speed slower by 2.5 times or more of set value	When in real mode of COM7201A, COM7101A, COM7061A
Variable Holdoff	Provided	When in real mode of COM7201A, COM7101A, COM7061A

89417

Item	Specification	Remarks
B Sweep		
Sweep Speeds	COM7201A Real mode: 10 ns/DIV - 0.5 s/DIV Storage mode: 10 ns/DIV - 50 ms/DIV	1-2-5 sequence
	COM7200A 10 ns/DIV - 0.5 s/DIV	1-2-5 sequence
	COM7101A Real mode: 20 ns/DIV - 0.5 s/DIV Storage mode: 20 ns/DIV - 50 ms/DIV	1-2-5 sequence
	COM7100A 20 ns/DIV - 0.5 s/DIV	1-2-5 sequence
	COM7061A Real mode: 50 ns/DIV - 0.5 s/DIV Storage mode: 50 ns/DIV - 50 ms/DIV	1-2-5 sequence
	COM7060A 50 ns/DIV - 0.5 s/DIV	1-2-5 sequence
Accuracy of Sweep Speeds	±2%	15 to 35°C (59 to 95°F). Accuracy for 8 DIV at center of CRT
Delayed Sweep		
Type of Sweep	Continuous delay, triggered delay	
Delay Jitter	< 1/10,000	

894178

Item	Specification	Remarks
Sweep Magnification	10 times COM7201A, COM7200A Maximum sweep speed: 1 ns/DIV COM7101A, COM7100A Maximum sweep speed: 2 ns/DIV COM7061A, COM7060A Maximum sweep speed: 5 ns/DIV	When in ALT mode, B sweep alone is magnified.
Accuracy of sweep Magnification	COM7201A 5 ns/DIV - 0.5 s/DIV: ±4% 1 ns/DIV, 2 ns/DIV : ±8% COM7200A 5 ns/DIV - 50 ms/DIV: ±4% 1 ns/DIV, 2 ns/DIV : ±8% COM7101A 5 ns/DIV - 0.5 s/DIV: ±4% 2 ns/DIV : ±8% COM7100A 5 ns/DIV - 50 ms/DIV: ±4% 2 ns/DIV : ±8% COM7061A 5 ns/DOV - 0.5 s/DIV: ±4% COM7060A 5 ns/DIV - 50 ms/DIV: ±4%	15 to 35°C (59 to 95°F). For 8 DIV at center of CRT. Excluding 10% portions at both ends of sweep.

8941179

Item	Specification	Remarks
X-Y Mode		When in real mode of COM7201A, COM7101A, COM7061A
Channels for Axes	X-axis: CH1 Y-axes: CH2, CH3, CH4 (X-Y operation of up to 3 channels)	Y-axis: CHOP mode
Deflection Factor	Identical with those of CH1, CH2, CH3, and CH4	
Accuracy of Deflection Factor	X-axis: ±3% (5 mV/DIV - 5 V/DIV) ±5% (1 mV/DIV, 2 mV/DIV) Y-axes: ±2% (CH2) ±5% (CH3, CH4)	15 to 35°C (59 to 95°F), 1 kHz, 4 - 5 DIV reference
Frequency Bandwidth	COM7201A, COM7200A DC - 4 MHz, within -3 dB COM7101A,COM7100A,COM7061A,COM7060A DC - 2 MHz, within -3 dB	X-axis: For CH1 Y-axes: Identical with CH2, CH3, CH4
X-Y Phase Difference	COM7201A, COM7200A < 3° (DC - 200 kHz) COM7101A,COM7100A,COM7061A,COM7060A < 3° (DC - 100 kHz)	

894180

o CRT Readout

Item	Specification	Remarks
Setting Display	CH1, CH2, CH3, CH4 scale factors and coupling modes CH1, CH2 UNCAL status Use of 10:1 probe A sweep, B sweep scale factors A sweep UNCAL status Holdoff, bandwidth limiter status ΔREF cursor, Δ cursor Delay time, ΔT, 1/ΔT, ΔV, voltage ratio Time ratio, phase difference, frequency counter reading, DVM reading (AC, DC, p-p)	For COM7201A, COM7101A, COM7061A in real mode, and for COM7200A, COM7100A, COM7060A
	CH1, CH2, CH3, CH4 scale factors and coupling modes CH1, CH2 UNCAL status Use of 10:1 probe A sweep, B sweep scale factors Bandwidth limiter status ΔREF cursor, Δ cursor Delay time, ΔT, 1/ΔT, ΔV, voltage ratio Scale factors and coupling modes of reference memory units 1 - 4 Reference memory time base scale factor, pre-delayed trigger point, magnification point, delayed start point, view time	For COM7201A, COM7101A, COM7061A in storage mode
DLY	Delay time and ΔT display	
Delay Time Range	0.50 to 10.00 times of A sweep setting of highest sweep speed range to 0.5 s/DIV range	
ΔT Accuracy	±2% (When in the time intervals measured with delayed B SWEEP)	

8941881

Item	Specification	Remarks
ΔT	Time interval between ΔREF cursor and Δ cursor is displayed.	
Measuring Range	±4.6 DIV or more from center of CRT	
Measuring Accuracy	±(3% of reading + 0.05 DIV)	×10 MAG off
1/ΔT	Reciprocal (frequency) of ΔT is displayed.	
ΔV	Voltage between ΔREF cursor and Δ cursor is displayed.	When in CH2 SINGLE SWEEP mode or when in CH2 and CH3/CH4 channel modes, scale factor is as that of CH2; in other cases, scale factor is as that of CH1.
Measuring Range	±3.6 DIV or more from center of CRT	
Measuring Accuracy	±(3% of reading + 0.05 DIV)	
Time Ratio	Displays the ratio of time interval between ΔREF cursor and Δ cursor with respect to 5 DIV on CRT as reference (100%).	When in ΔT measurement, SWEEP VARIABLE is displayed in UNCAL status.
Measuring Range	±4.6 DIV or more from center of CRT	
Measuring Accuracy	±(3% of reading + 0.05 DIV)	×10 MAG off
Phase Difference	Displays in degrees the phase difference between ΔREF cursor and Δ cursor with respect to 5 DIV on CRT as reference (360 degrees).	When in 1/ΔT measurement, SWEEP VARIABLE is displayed in UNCAL status.
Measuring Range	±4.6 DIV or more from center of CRT	
Measuring Accuracy	±(3% of reading + 0.05 DIV)	×10 MAG off

8941882

Item	Specification	Remarks
Voltage Ratio	Displays the ratio of voltage between ΔREF cursor and Δ cursor with respect to 5 DIV on CRT as reference (100%).	When in ΔV measurement, GAIN VARIABLE is displayed in UNCAL status.
Measuring Range	±3.6 DIV or more from center of CRT.	
Measuring Accuracy	±(3% of reading + 0.05 DIV)	
Δ Delay	Measures ΔT or 1/ΔT by using B sweep instead of ΔREF cursor and Δ cursor.	Operates in ALT sweep and B sweep modes at the same time.
Measuring Range	3.6 DIV or more to right and left from center of CRT	
Measuring Accuracy	±(2% of reading + 0.05 DIV) (Excluding 0.5 DIV from left hand end of CRT)	×10 MAG off
DVM	Displays with 3-1/2 digits in the CH1 input for up to ±7 DIV on CRT (AC voltage, DC voltage, p-p voltage)	Not effective when in storage mode of COM7201A, COM7101A, COM7061A
AC	Measures AC voltage in rms value for 20 Hz - 100 kHz Measuring accuracy: ±4%	Tcal ±5°C, for 4 DIV at center of CRT. (Note)
DC	Measures DC voltage Measuring accuracy: ±3%	Tcal ±5°C, for 4 DIV at center of CRT. (Note)
p-p	Measures peak-to-peak voltage for 20 Hz - 10 MHz Measuring accuracy: 20 Hz - 5 MHz : ±5% 5 MHz - 10 MHz: ±10%	Tcal ±5°C, for 4 DIV at center of CRT. (Note)

(Note) Tcal: 20 - 30°C after using internal auto calibration check

8941183

Item	Specification	Remarks
FREQ	Measures frequency of input channel signal selected by TRIG SOURCE switch. 4-digit display, auto-range	Displays at the same time with DVM. Not effective when two or more triggering source signals are selected.
Measuring Ranges	COM7201A, COM7200A: 1 Hz - 200 MHz COM7101A, COM7100A: 1 Hz - 100 MHz COM7061A, COM7060A: 1 Hz - 80 MHz	
Measuring Accuracy	±0.1%	

8941184

o Storage Mode (COM7201A, COM7101A, COM7061A)

Item	Specification	Remarks
Vertical Axis Resolution	8 bits (25 points/DIV)	
Time Base (Horizontal Axis) Resolution	10 bits (100 points/DIV)	
Sampling Rates	COM7201A, COM7101A 20 samples/sec - 50M samples/sec: When in single channel or ALT mode 20 samples/sec - 20M samples/sec: When in CHOP mode COM7061A 20 samples/sec - 20M samples/sec	
Accuracy of Sampling Rate	0.02%	
Accuracy of Deflection Factor	CH1, CH2 5 mV/DIV - 5 V/DIV: ±(2% + 1 LSB) 1 mV/DIV, 2 mV/DIV: ±(4% + 1 LSB) CH3, CH4 ±(5% + 1 LSB)	15 to 35°C (59 to 95°F), 1 kHz, 4 - 5DIV reference
Frequency Bandwidth	COM7201A, COM7101A DC - 100 MHz, within -3 dB DC - 50 MHz, within -3 dB (1 mV/DIV, 2 mV/DIV) COM7061A DC - 60 MHz, within -3 dB DC - 30 MHz, within -3 dB (1 mV/DIV, 2 mV/DIV)	50 kHz, 8DIV reference, 15 to 35°C (59 to 95°F)
Effective Storage Frequency	COM7201A, COM7101A 14 MHz: When in single channel mode or ALT mode. When in SINGLE SWEEP mode with 2 µs/DIV or faster ranges. 5.7MHz: When in 2-channel CHOP mode. When in SINGLE SWEEP mode with 5 µs/DIV or faster ranges. 100MHz, -3dB: At time base ranges for REPEAT mode. For periodic signal.	With sine interpolation

'90.8.31

89411854

Item	Specification	Remarks
Effective Storage Frequency (cont'd)	COM7061A 5.7MHz: When in SINGLE SWEEP mode at ragnges faster than 5 μs/DIV. 60 MHz, -3 dB: At time base ranges for REPEAT mode. For periodic signal	With sine interpolation
Effective Rise Time	COM7201A, COM7101A < 32 ns: When in single channel mode or ALT mode. When in SINGLE SWEEP mode with 2 μs/DIV or faster ranges. < 80 ns: When in 2-channel CHOP mode. When in SINGLE SWEEP mode with 5 μs/DIV or faster ranges. Approx. 3.5 ns: At time base ranges for REPEAT mode. For periodic signal.	With pulse interpolation
	COM7061A < 80 ns: For one-shot signal or non-periodic signals. When in SINGLE SWEEP mode at ranges faster than 5 μs/DIV. Approx. 5.8 ns: At time base ranges for REPEAT mode. For periodic signal.	With pulse interpolation
Sweep Channels	SINGLE SWEEP: CH1, CH2, CH3, CH4 ALT: Any combination of CH1 through CH4 CHOP: CH1 and CH2	

'90.8.31

894186A

Item	Specification	Remarks
REPEAT Mode	COM7201A 1 µs/DIV - 10 ns/DIV (When in single channel or multi-channel ALT mode) 2 µs/DIV - 10 ns/DIV (When in 2-channel CHOP mode)	Except when in SINGLE SWEEP mode in random equivalent time sampling
	COM7101A 1 µs/DIV - 20 ns/DIV (When in single channel mode or multi-channel ALT mode) 2 µs/DIV - 20 ns/DIV (When in 2-channel CHOP mode)	Except when in SINGLE SWEEP mode in random equivalent time sampling
	COM7061A 2 µs/DIV - 50 ns/DIV	Except when in SINGLE SWEEP mode in random equivalent time sampling
ROLL Mode	5 s/DIV - 0.1 s/DIV, automatic operation	When in single channel mode or 2-channel CHOP mode
ENVELOPE Mode	Operable ranges: 50 ms/DIV - 10 µs/DIV	
Waveform Magnification	Time base ranges of up to 100 times Reference position for magnification: 0 DIV to 10 DIV, in 1-DIV steps, 11 positions Interpolation: Sine or pulse	When in PAUSE status
Display Memory	(1024 words per channel) × 4	
Reference Memory	For 4 waveforms	Data can be saved in reference memory when in SAVE status.
Pre-triggering	Triggering points: 0, 2, 4, 6, or 8 DIV on CRT	
View Time	0 to approx. 10 sec, 4 steps	

82418 87

o GP-IB Interface Functions (COM7201A, COM7101A, COM7061A)

Item	Specification	Remarks
Interface Functions (IEEE488-1978) (IEC625)	SH1: All source handshake functions AH1: All acceptor handshake functions T5: Talker function L3: Listener function SR1: All service request functions RL1: All remote/local functions PP0: No parallel poll function DC1: All device clear functions DT0: No device trigger function C0: No control function	COM7201A,COM7101A, COM7061A. GP-IB incorporated models of COM7200A,COM7100A, COM7060A.
Programmable Functions	All functions except VERNIER, FOCUS, and TRACE ROTATION	
Formats	Device commands: ASCII Waveform data: Binary or ASCII (selectable)	Waveform data is for COM7201A, COM7101A and COM7061A only

89 4 1 88

o Programmable Control Functions (COM7201A, COM7101A, COM7060A)

Item	Specification	Remarks
Program Steps	100 (00 - 99)	
Programmable Functions	All functions except INTEN, FOCUS, and TRACE ROTATION controls	By using RC01-COM in conjunction. Only for oscilloscopes incorporated with GP-IB functions
Program Backup Functions	Provided	
External Control Functions	Probe selector (PS01-COM)	By using RC01-COM in conjunction.
Remote Controller RC01-COS		
Step Address Display	00 - 99, 7-segment LED's	
Control Functions	COPY: Transfer of data between steps WR: Storing of settings START: Setting of START address END: Setting of END address PROB: Setting of probe number selected by probe selector CONT: VR function selected by RC01-COM RESET: Resetting to START address DEC: Decrement of step address by 1 step INC: Increment of step address by 1 step	
Remote Control Functions	CH1, CH2, CH3 and CH4 vertical positioning and horizontal positioning, REF cursor or DLY positioning, and Δ cursor positioning (verniers); automatic step address increment.	
Setting Protective functions	Two types: Instrument panel protect Control function protect	With selector switch
Step Address Output	BCD signal	

8941889

o Z-axis

Item	Specification	Remarks
Sensitivity	Intensity modulation discernible with 3 Vp-p input signal. Negative-going signal for brighter trace and positive-going signal for dimmer trace.	
Frequency Range	DC - 10 MHz	
Input Resistance	5 kΩ ±10%	
Maximum Safe Input Voltage	50 Vpeak (DC + AC peak)	AC components not higher than 1 kHz

o Signal Outputs

Item	Specification	Remarks
Sweep Signal Output	A sweep signal, approx. 1 Vp-p	BNC terminal at rear panel Output impedance approx. 1 kΩ
Sweep Gate Signal Outputs	A sweep gate signal output: Approx. 5 Vp-p B sweep gate signal output: Approx. 5 Vp-p	BNC terminals at rear panel Output impedance approx. 1 kΩ

o Calibration Signal

Item	Specification	Remarks
Waveform	Positive pulse signal	
Frequency	1 kHz ±0.1%	
Output Voltage	0.5 Vp-p ±2%	
Output Resistance	Approx. 2 kΩ	

89419O

o Pen Out Signals (COM7201A, COM7101A, COM7061A)

Item	Specification	Remarks
Output Signals for X-Y Recorder	Delivered when in storage mode	
X-axis output	0.1 V/DIV ±10% (Speed automatically varies in response to Y-axis amplitude.)	BNC terminal at rear panel (common with sweep signal output terminal)
Y-axis Output	0.1 V/DIV ±10%	BNC terminal at rear panel
SYNC Output	TTL level (When in Pen Out: "HIGH")	BNC terminal at rear panel (common with A sweep gate terminal)

o CRT Circuit

Item	Specification	Remarks
Cathode-ray Tube	6-inch square screen, with internal white graticule Effective screen area: 8 × 10 cm (3.15 × 3.94 in.) Acceleration voltage: Approx. 20 kV	

89 4191

o Power Requirements

Item	Specification	Remarks
Line Voltage	90 to 250 V	No voltage selection required.
Line Frequency	50/60 Hz	
Power consumption	COM7201A, COM7101A, COM7061A: Approx. 103 watts	
	COM7200A, COM7100A, COM7060A: Approx. 65 watts	

o Memory Backup: Data protected: Panel setting data, calibration data, waveform data, and RC01-COM setting data.

Backup battery: Lithium battery (life expectancy 10 years or more from shipment from factory, at 25°C (77°F))

o Probe Power Supplies: For two active probes, through terminals at reat panel, for COM7201A and COM7200A

o Operation Environments: 0 to 50°C (32 to 122°F), 95% RH or less

o Environment for Performance to Specification: 5 to 45°C (41 to 113°F), 90% RH or less

o Mechanical Dimensions

Overall Sizes: 318 W × 150 H × 400 D mm (Mainframe)
(12.52 W × 5.91 H × 15.75 D in.)
Max 380 W × 200 H × 465 D mm (Maximum)
(14.96 W × 7.87 H × 18.31 D in.)

Weights COM7201A, COM7101A, COM7061A: Approx. 10 kg (22 lbs)
COM7200A, COM7100A, COM7060A: Approx. 8 kg (18 lbs)

o Accessories

Power cord One
Instruction manual One
Probes COM7201A, COM7200A: Two P250-2 probes (10:1)
COM7101A, COM7100A: Two P100-S1 probes (10:1/1:1)
COM7061A, COM7060A: Two P060-S probes (10:1/1:1)

894192

3. PRECAUTIONS BEFORE OPERATING THE OSCILLOSCOPE

3.1 Unpacking the Oscilloscope

The oscilloscope is shipped from the factory after being fully inspected and tested. Upon receipt of the instrument, immediately unpack and inspect it for any damage which might have been sustained when in transportation. If any sign of damage is found, immediately notify the bearer and/or the dealer.

3.2 Environments

The normal ambient temperature range of this instrument is 0 to 50°C (32 to 122°F). Operation of the instrument outside of this temperature range may cause damage to the circuits.

Do not use the instrument in a place where strong magnetic or electric fields exist. Such fields may disturb the measurement.

3.3 CRT Intensity

In order to prevent permanent damage to the CRT phosphor, do not make the CRT trace excessively bright or leave the spot stationary for an unreasonably long time.

3.4 Maximum Safe Input Voltages

The maximum safe input voltages applicable to the input terminals and probes are as shown in the below table. Do not apply any voltages higher than these limits.

Input Terminals	Maximum Safe Input Voltage
CH1, CH2, CH3, CH4 (1 MΩ)	400 V peak (DC + AC peak)
CH1, CH2 (50 Ω)	5 Vrms
Probes	600 V peak (DC + AC peak)
Z-axis	50 V peak (DC + AC peak)

89 41 93

4. OPERATING

4.1 Description of Front Panel

This section gives descriptions of the front panel items referring to Figure 4-1.

* : Functions of the items indicated by the asterisk marks partially differ when in the storage mode. Refer to Section 4.2.

◦ CRT circuits

POWER ..... ① The main power switch of the oscilloscope. When power is turned on, the LED illuminates.

INTEN ..... ② Controls brightness of the spot or trace. For approximately 1 second after this knob is pushed in, the beam finder function is brought into effect and the direction in which the beam has been deflected off and lost from the CRT screen can be identified.

TRACE ROTATION ..... ③ Semi-fixed potentiometer for aligning the horizontal trace with graticule lines.

FOCUS ..... ④ For focusing the trace to the sharpest image.

* B INT, SCAL, READOUT .. ⑤ Each time as you press this control, its function is switched over to B INT (B sweep intensity control), SCAL (graticule illumination control), or READOUT (CRT readout character brightness and cursor brightness control).

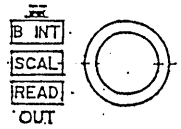

When in the A sweep mode, its function is switched over to SCAL or READOUT only.

Bezel ..... ㊶ Acts as a base to install a camera.

Filter ..... ㊷ Filter (grey) to improve contrast of waveform displayed on CRT. Readily removable.

894194

- Vertical Axes

CH1 & X input ..... ⑧

CH1 vertical axis input terminal. X-axis (horizontal direction) input terminal when in X-Y mode.

CH2 input ..... ⑫

CH2 vertical axis input terminal. Y-axis (vertical direction) input terminal when in X-Y mode.

CH3 input ..... ⑭

CH3 vertical axis input terminal. Y-axis (vertical direction) input terminal when in X-Y mode.

CH4 input ..... ⑱

CH4 vertical axis input terminal. Y-axis (vertical direction) input terminal when in X-Y mode.

AC/DC, GND, 50Ω .... ⑨ ⑬
For COM7200A and COM7201A only

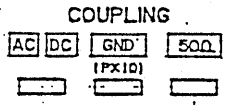

Switches to select coupling of input terminal to vertical amplifier of CH1 and CH2.

AC/DC: Each time as you strike this key, coupling mode is changed to AC or DC.

GND: Input of vertical amplifier is grounded and input terminal is made open.

50Ω: To select input impedance between 50Ω and 1MΩ. When 50Ω is selected, LED illuminates.

AC, GND, DC ..... ⑨ ⑬
For COM7101A, COM7100A, COM7061A and COM7060A only

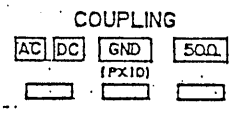

Switches to select coupling of input terminal to vertical amplifier of CH1 and CH2.

AC: AC coupling
GND: Input of vertical amplifier is grounded and input terminal is made open.
DC: DC coupling

AC/DC, GND, +5 ..... ⑮ ⑲

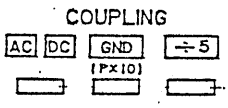

Switches to select coupling of input terminal to vertical amplifier of CH3 and CH4.

AC/DC: Each time as you strike this key, coupling mode is changed to AC or DC.

894195

GND: Input of vertical amplifier is grounded and input terminal is made open.

+5: Each time as you strike this key, deflection factor is changed between 0.1 V/DIV and 0.5 V/DIV. When 0.5 V/DIV is selected, LED illuminates.

VOLTS/DIV ..... ⑥ ⑩

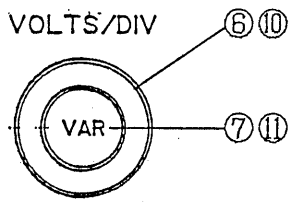

To select deflection factor of CH1 or CH2, from 1 mV/DIV to 5 V/DIV in 12 ranges. The selected range is digitally displayed on CRT.

VARIABLE ..... ⑦ ⑪

Vernier adjustment of deflection factor of CH1 or CH2. Adjustment is down to 1/2.5 or less of the deflection factor indicated by VOLTS/DIV switch. When this knob is pushed in (calibrated position), deflection factor is as indicated by VOLTS/DIV switch. When this knob is pushed out (uncalibrated position), it acts as a vernier control.

* POSITION ..... ㉟ ㊲ ㊳ ㊵

Vertical positioning of trace or spot. CH1 POSITION ㊵ acts also as a horizontal positioning control when in X-Y mode. CH2 POSITION ㊳ acts also as an INV switch and the polarity of the CH2 signal is inverted each time as you press this knob.

* VERT MODE ..... ㊴

To select vertical modes. You may strike CH1, ADD, CH2, CH3 and CH4 keys to select them in any combination. The LED lamps of the selected ones illuminate and the corresponding signals are displayed on CRT. As you strike keys again, the corresponding LED lamps and displayed signals go off, except when in single channel mode.

ADD: Algebraic sum or difference of CH1 and CH2 signals is displayed.

8941196

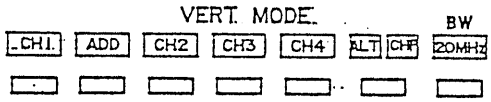

ALT/CHOP: Selects ALT mode or CHOP mode. When in ALT mode, channels are swept alternately with one complete sweep cycle for each channel. When in CHOP mode, channels are swept in turn being chopped at a frequency of approximately 1 MHz.

20MHz BW: Bandwidth of vertical amplifier is limited at approximately 20 MHz. This mode is used to cut off undesirable frequencies wider than 20 MHz and is selectable irrespective of settings of other switches.

◦ Time Base (Horizontal Axis)

A, B TIME/DIV ..... ⑯

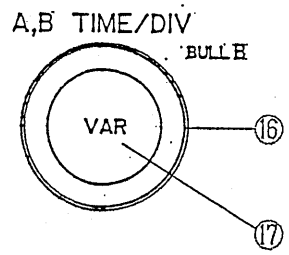

Selects sweep time of A sweep or B sweep (delayed sweep). The pushed-in position of the knob is for A sweep and the pulled-out position is for B sweep.

Even when the knob is in the pulled-out position, however, if HORIZ MODE ㊱ is set for A sweep, this switch is for A sweep.

Either when in A sweep or B sweep, sweep time is digitally displayed on CRT.

* VARIABLE ..... ⑰

Vernier control of A sweep time, for up to 2.5 times or more slower than the speed selected by A TIME/DIV switch.

When the knob is set in the pushed-in position (calibrated position), sweep speed is as selected by A TIME/DIV switch. When the knob is set in the pulled-out position (uncalibrated or vernier position), sweep speed is continuously adjustable.

8941697

* MODE ..... ㉓ Select sweep mode as below, and act also as a RESET switch when in the SINGL mode.

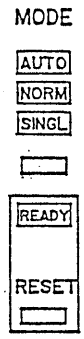

AUTO: When no triggering signal is applied, or when triggering signal frequency is lower than 50 Hz, sweep runs automatically in a free mode.

NORM: When no triggering signal is applied, sweep is in a standby state and no trace is displayed on CRT. This mode is used primarily for viewing of signals of lower than 50 Hz.

SINGL: When a triggering signal is applied, the sweep runs one time. As you press the RESET switch after the sweep is over, the sweep circuit is rest to the READY state and the READY lamp illuminates. The READY lamp goes off when the sweep is over.

* HORIZ MODE ..... ㊱ Select X-Y mode, A sweep mode or B sweep mode, as follows.

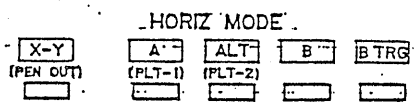

X-Y: For X-Y mode of operation with CH1 for X-axis and CH2, CH3, and/or CH4, for Y-axes. Y-axes are selectable with VERT MODE ㊴. If no selection for Y-axes (CH2 – CH4) is made before selecting the X-Y mode, CH1 and CH2 are automatically selected for the X-Y mode of operation.

A: Selects A sweep alone for single time base mode of operation.

ALT: A sweep (regular sweep) and B sweep (delayed sweep) run alternately. A sweep is with accentuated brightness for the section to be magnified. B sweep is for display of the magnified waveform.

B: Selects B sweep (continuously delayed sweep). Sweep speed is as selected by B TIME/DIV switch. Sweep starts when period preset by DELAY TIME POSITION ㉝ has elapsed.

B TRIG: Selects triggered delay, and is enabled when in ALT or B sweep mode. B sweep starts as triggered by B trigger signal after delay time set by DELAY TIME POSITION ㉝ has elapsed. When in the B TRIG mode, the AUTO LEVEL ㉗, TRIG SLOPE ㉘, and TRIG LEVEL ㉚ are change to B trigger function and their green lamps illuminate as well as those of the TRIG SOURCE ㉔ and TRIG CPLG ㉕ to indicate that they are set for B triggering.

POSITION ..... ⑳

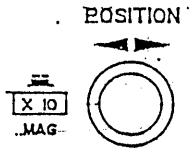

For horizontal positioning of the trace or spot. When in the ×10 MAG mode, the horizontal position of the beam spot (trace) is adjustable for a range of approximately 20 DIV with the POSITION control. As you turn the control to the full clockwise or counterclockwise position (to the end position), the beam spot (sweep) moves automatically and continuously to the right or left, respectively. To stop the moving beam spot (trace), turn the control in the reverse direction from the end position.

841699

◦ TRIGGERING

SOURCE ..... ㉔

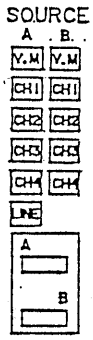

Selects the triggering the signal source. Switch A selects the A triggering. Switch B selects the B triggering only when HORIZ MODE ㊱ is set for the ALT mode or for the B sweep and the B-TRIG mode.

V-MODE (V.M): The input signal selected by VERT MODE ㊴ is used as the triggering source signal. When in a multi-channel mode, triggering is made in ALT mode, and V-MODE lamp and the indicator lamp of the selected channel illuminate. When CHOP mode is selected by VERT MODE ㊴ or when AUTO LEVEL ㉗ is selected, however, the left most one alone of the indicator lamps of the selected channels illuminates indicating that the corresponding channel signal is selected for triggering source signal.

CH1: CH1 input signal is used as triggering source signal.

CH2: CH2 input signal is used as triggering source signal.

CH3: CH3 input signal is used as triggering source signal.

CH4: CH4 input signal is used as triggering source signal.

LINE: AC line signal is used as triggering source signal. The A TRIG mode alone is selectable.

NOTE: When in the A TRIG mode, an orange lamp illuminates; when in the B TRIG mode, a green lamp illuminates.

894200

CPLG ..... ㉕

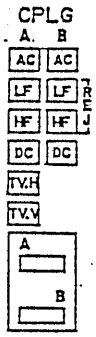

These switches select the coupling mode between the triggering signal source and the trigger circuit. Switch A selects the A triggering mode (the orange lamp illuminates) and switch B selects the B triggering mode (the green lamp illuminates). When in the A triggering, these switches also select the coupling to TV sync circuit. The B triggering can be selected only when the HORIZ MODE ㊱ is set for the B TRIG mode.

AC: AC coupling, eliminating DC components

LF-REJ: Components lower than 50 kHz are rejected.

HF-REJ: Components higher than 50 kHz are rejected.

DC: DC coupling

TV.H: Triggering is made with TV horizontal sync signal. Effective for A TRIG mode only.

TV.V: Triggering is made with TV vertical sync signal. Effective for A TRIG mode only.

SLOPE ..... ㉘

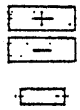

Selects either positive-going slope or negative-going slope for triggering point.

+: Triggering occurs when a positive-going signal crosses the trigger level.

−: Triggering occurs when a negative-going signal crosses the trigger level.

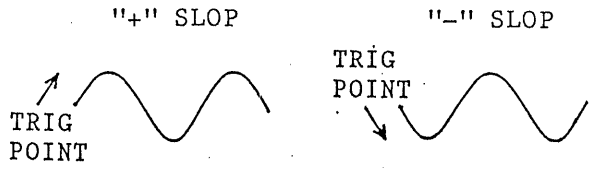

NOTE: When in the A TRIG mode, an orange lamp illuminates; when in the B TRIG mode, a green lamp illuminates.

894201

LEVEL ..... ㉚

Controls the triggering level to adjust the starting point of the waveform displayed on CRT.

When A/B TRIG selector switch ㉖ is set for A TRIG, this knob is used to adjust the A TRIG level; When set for B TRIG, this knob is used to adjust the B TRIG level.

When in the A TRIG mode, TRIG LED ㉙ illuminates.

LEVEL AUTO ..... ㉗

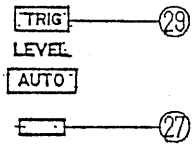

When in the LEVEL AUTO mode, the LEVEL control ㉚ is disabled and the triggering level is maintained at an optimal level covering from the minimum amplitude to the maximum amplitude.

Note: When in the A TRIG mode, the orange lamp illuminates; When in the B TRIG mode, the green lamp illuminates.

A/B ..... ㉖

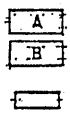

Selects either the A or the B triggering mode for the SLOPE ㉘, LEVEL ㉚, and LEVEL AUTO ㉗ which are used in common for both the A and the B triggering. Each time as you press this switch, either the A or the B triggering mode is selected. This switch is effective only when the HORIZ MODE ㊱ is set for the ALT mode or for the B sweep and the B TRIG mode.

Immediately after the HORIZ MODE ㊱ is set for the ALT mode or for the B sweep and the B TRIG mode, the B indicator lamp illuminates and the above common-use controls are set for the B triggering.

Unless the HORIZ MODE ㊱ is set for the B TRIG mode, the A/B switch does not operate, the A lamp illuminates, and the above-mentioned common-use controls are in the A triggering mode.

89420202

◦ CRT Readout

The functions of the CURSOR SW ㉛ and the SUB CURSOR SW ㉜ for data to be displayed on the CRT readout can be set mutually independently for each of the A, ALT, and the B sweep modes which are selectable with the HORIZ MODE ㊱. For example, you may set the CURSOR SW ㉛ for the 1/ΔT measuring function for the ALT sweep mode and for the ΔT measuring function for the B sweep mode. With this setting, simply by selecting the HORIZ MODE ㉛ thereafter, measurement will automatically become OFF when in the A sweep mode, frequency (1/ΔT) measurement when in the ALT sweep mode, or period (ΔT) measurement when in the B sweep mode. The above, however, is not applicable to other cursor functions. The functions of the switches related to the CRT readout for respective settings of the HORIZ MODE ㊱ are described in this section.

(1) When HORIZ MODE ㊱ is set for A sweep

CURSOR SW ..... ㉛

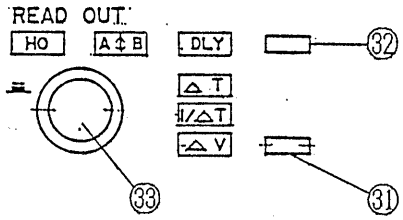

This switch selects three functions. Measurement ΔT, 1/ΔT or ΔV cursor and measurement off. As this switch is changed, functions of the READOUT control ㉝ are changed automatically. (When in the measurement OFF state, the HO lamp illuminates to indicate that the READOUT control ㉝ is acting as a HOLD-OFF control.)

When in any one of the above types of measurement, position of the dotted-line cursor is adjustable with the READOUT control ㉝. The adjustable range is approximately ±1 DIV from center of screen. As you turn the control to the full clockwise or counter-clockwise position (to the end position), the cursor moves automatically and continuously. To stop the moving cursor, turn the control in the reverse direction from the end position.

The cursor line can be changed to broken lines or to dotted lines by pressing the knob.

When both cursor lines are dotted, they are in the tracking mode and can be moved keeping the distance between them constant.

894203

Each time as you press the knob, the cursor changes in the order of broken line → tracking mode → dotted line tracking mode → broken line.

ΔT: Differential time between two vertical cursors (one is broken line and the other is dotted or broken line) is determined and digitally displayed on CRT.

When SWEEP VARIABLE ⑰ is set in the on state, time ratio with reference to 5 DIV as 100% is determined and displayed. This mode of operation is convenient for measurement of the duty ratio of pulse wave.

1/ΔT: Differential time between two vertical cursors (one with broken line and the other with dotted or broken line) is determined and its recipro-cal is calculated and digitally displayed as frequency.

When SWEEP VARIABLE ⑰ is set in the abled state, phase with reference to 5 DIV as 360 degrees is determined and displayed.
This mode of operation is convenient for measurement of phase difference.

ΔV: Differential voltage between two horizontal cursors (one with broken line and the other with dotted or broken line) is determined and digitally displayed on CRT.

Scale factor is as that of CH1, except when CH2 single channel is selected by VERT MODE ㊴ in which case scale factor is as that of CH2.

89 4204

When the VARIABLE knob is in the pushed out state (UNCAL state), voltage ratio with reference to 5 DIV as 100% is determined and displayed.

* SUB CURSOR SW ..... ㉜ This switch changes READOUT control ㉝ to holdoff control function when in ΔT, 1/ΔT, or ΔV measurement.

As you press this switch, HO: lamp illuminates and holdoff period becomes adjustable. As you press this switch again or press the READOUT control ㉝, HO lamp goes off and cursor measurement resumes.

When the ΔT, 1/ΔT and ΔV are not selected the HO lamp, constantly illuminates and the READOUT control ㉝ adjusts the holdoff function and the SUB CURSOR SW ㉜ is disabled.

When in A sweep mode		Function selectable with SUB CURSOR SW	
Function selectable with CURSOR SW ㉛	LED lamp indication	ΔT	ΔT, HO
	Control function	Cursor position	Holdoff time
	LED lamp indication	1/ΔT	1/ΔT, HO
	Control function	Cursor position	Holdoff time
	LED lamp indication	ΔV	ΔV, HO
	Control function	Corsor position	Holdoff time
	LED lamp indication	HO	———
	Control function	Holdoff time	———

894205

(2) When HORIZ MODE ㊱ is set for ALT sweep

* CURSOR SW ..... ㉛

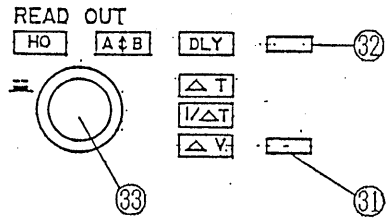

This switch selects the functions of the READOUT control ㉝ for delay time setting or time interval measurement (⊿T, 1/⊿T) with delayed sweep.

When in the ⊿T or 1/⊿T measuring mode, controllable intensity modulation sections can be changed by pressing the READOUT control ㉝.

When in the tracking mode, as in the case of measurement with cursors, two intensity-modulated sections can be moved keeping the distance between them constant.

Each time as you press the control knob, control function changes in the order of intensity modulation A → tracking mode → intensity modulation B → tracking mode → intensity modulation A.

DLY: READOUT control ㉝ acts as delay time control for B sweep. The delay time is digitally displayed on CRT.

When SWEEP VARIABLE ⑰ is set in the on state, delay time displayed on the CRT is in the unit of DIV.

⊿T: Differential time between two intensity-modulated sections on A sweep is determined and digitally displayed on CRT.

89 4206

When in single channel mode, two intensity-modulated sections are displayed on the same trace.

When in multi-channel mode and VERT MODE ㊴ is set for ALT mode but TRIG SOURCE ㉙ is not set for V-MODE triggering, intensity-modulated sections are displayed on channels with priority in the order of CH1, CH2, CH3, CH4, and ADD, with one intensity modulated section on the trace of an odd number channel and the other intensity modulated section on the trace of an even number channel, for measurement of differential time between channels.
When an odd number of channels are measured, however, two intensity-modulated sections are displayed on the trace of the lowest-priority channel. When in the five-trace mode (CH1, CH2, CH3, CH4, and ADD), one intensity-modulated section is displayed on CH1 trace and the other intensity-modulated section on CH2 trace, while both intensity-modulated sections are displayed on each of CH3, CH4, and ADD traces.

When SWEEP VARIABLE ⑰ is set in the on state, time ratio with reference to 5 DIV as 100% is determind and displayed.

1/ΔT: Differential time (period) between intensity-modulated sections on A sweep is determined and its reciprocal (frequency) is calculated and displayed.

When the SWEEP VARIABLE ⑰ is set in the on state, phase difference is measured and displayed with a reference of 5 DIV as 360 degrees.

894207

* SUB CURSOR SW ..... ㉜ This switch selects the function of READOUT control ㉝ between holdoff function when in DLY, ⊿T or 1/⊿T mode and trace separation function.

As you press this switch, HO lamp illuminates and holdoff time becomes adjustable. As you press this switch again, A↕B lamp illuminates and B sweep position with respect to A sweep position is vertically adjustable when in ALT mode.
As you press this switch once more, DLY, ⊿T or 1/⊿T measurement resumes.
It resumes also as you press the READOUT control ㉝.

When in ALT mode		Function selectable with SUB CURSOR SW ㉜		
Function selectable with CURSOR SW ㉛	LED lamp indication	DLY	DLY, HO	DLY, A ↕ B
	Control function	Delay time	Holdoff time	Trace separation
	LED lamp indication	⊿T	⊿T, HO	⊿T, A ↕ B
	Control function	Intensity modulation section positioning	Holdoff time	Trace separation
	LED lamp indication	1/⊿T	1/⊿T, HO	1/⊿T, A ↕ B
	Control function	Intensity modulation section positioning	Holdoff time	Trace separation

894208

(3) When HORIZ MODE ㊱ is set for B sweep

* CURSOR SW ..... ㉛

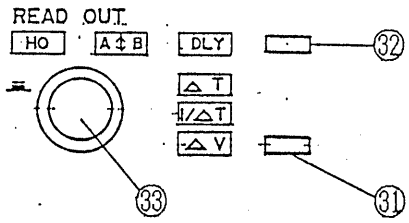

This switch selects the functions of the READOUT control ㉝ for delay time setting or time interval measurement (ΔT, 1/ΔT) with delayed sweep.

When in ΔT or 1/ΔT measuring mode, controllable B sweep can be changed by pressing the READOUT control ㉝.

Each time as you press this knob, the control function changes in the order of B sweep a → tracking mode → B sweep b → tracking mode → B sweep a.

DLY: Delayed and magnified sweep is displayed on CRT, with delay time controllable with the READOUT control ㉝. Delayed time is digitally displayed on CRT. When SWEEP VARIABLE ⑰ is set in the on state, delay time is displayed in the unit of DIV.

ΔT: Differential time between two B sweeps is determined and digitally displayed on the CRT.

When in single channel mode or CHOP mode, differential time between two points on the same signal waveform is displayed.

When in multi-channel mode and the VERT MODE ㊴ is set for ALT mode but TRIG SOURCE ㉔ is not set for V-MODE triggering, it measures the period of time

894209

between one point on the trace of the odd-number channel and the other point on the trace of the even-number channel, with channel priority in the order of CH1, CH2, CH3, CH4, and ADD. When an old number of channels are displayed, differential time between two points on the same trace is measured for the channel of the lowest priority. Except when in the 5-trace mode with CH1, CH2, CH3, CH4 and ADD, differential time between CH1 and CH2 and that between two points on each of the remaining traces are displayed.

When in triggered delay mode, a sign of inequality on CRT is affixed to prevent reading errors.
When SWEEP VARIABLE ⑰ is set in the on state, time ratio with reference to 5 DIV on A sweep as 100% is measured and displayed.

1/ΔT: Differential time (period) between two points on B sweep is determined and its reciprocal (frequency) is calculated and displayed.

When SWEEP VARIABLE ⑰ is set in the on state, phase difference with reference to 5 DIV on A sweep as 100% is measured and displayed.

* SUB CURSOR SW ..... ㉜ This switch selects function of READOUT control ㉝ between holdoff function and trace separation function when in DLY, ΔT or 1/ΔT mode.

When trace separation function is selected, all traces displayed on CRT are of B sweep mode. The trace which is movable with the knob is of the lowest priority channel.

To return to DLY, ΔT or 1/ΔT mode, press again this switch or press the READOUT control ㉝.

When in B sweep mode		Function selectable with SUB CURSOR SW ㉜		
Function selectable with CURSOR SW ㉛	LED lamp indication	DLY	DLY, HO	———
	Control function	Delay time	Holdoff time	———
	LED lamp indication	ΔT	ΔT, HO	ΔT, A ↕ B
	Control function	Intensity-modulated position adjustment	Holdoff time	Trace separation
	LED lamp indication	1/ΔT	1/ΔT, HO	1/ΔT, A ↕ B
	Control function	Intensity-modulated position adjustment	Holdoff time	Trace separation

89421

(4) Digital voltmeter and frequency counter functions

* DVM SW ..... ㉞

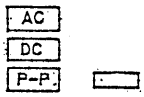

This switch selects the DVM function to measure the AC, DC, or peak-to- peak voltage of the signal applied to CH1 input. The measured value is digitally displayed on CRT.

When the DVM is set in the on state, frequency of the triggering source signal selected by TRIG SOURCE ㉔ also is measured in an auto-range system and displayed on CRT. DVM and counter are disabled when COM7201A, COM7101A, or COM 7061A is in storage mode.

Each time as you press the switch, measurement is changed in the sequence of AC voltage, DC voltage, peak-to-peak voltage, and off.

Note: Note that measurement by DVM may involve larger errors when the measured signal amplitude is unreasonably small or large. Note also that frequency counter may not operate when the signal pulse width is very narrow, the signal amplitude is very small, or when the signal is in a state such that no triggering is successfully effected.

AC: Measures the AC voltage (true rms value) of the signal applied to CH1 input for a range of 20 Hz – 100 kHz.

89421 2

When COUPLING ⑨ of CH1 is set to AC-coupling, rms value of AC voltage signal is measured; when it is set to DC-coupling, DC + AC rms value is measured.

DC: Measures the DC voltage of the signal applied to CH1 input.

p-p: Measures the peak-to-peak voltage of the signal applied to CH1 input, for a frequency range of 20 Hz – 10 MHz.

Symbols displayed on CRT are as shown in the following table.

DVM SW ㉞	CH1 COUPLING ⑨	Symbol
AC	AC	$\tilde{V}$
	DC	$\tilde{\tilde{V}}$
DC	AC	? V
	DC	$\overline{V}$
p-p	AC, DC	p...V

◦ Others

CAL (Vp-p) ..... ㉒ This terminal provides a 1 kHz ±0.1% square wave 0.5 Vp-p calibration signal with ±2% voltage accuracy. Output resistance is approximately 2k ohms.

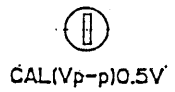

..... ㉑ Ground terminal

89 4213

4.2 Description of Front Panel (for Storage Mode)

This section gives descriptions of the front panel items for the storage mode of COM7201A, COM7101A, and COM7061A, referring to Figure 4–2. For other front panel items, see Section 4.1.

◦ CRT Circuits

B INT, SCAL, READOUT .. ⑤

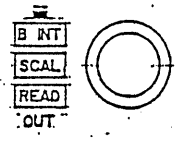

Each time as you press this knob, its function is changed to SCAL (adjustment of graticule illumination brightness) or READOUT (adjustment of readout character and cursor brightness). When in the storage mode, this knob is not changed to B INT.

◦ Vertical Axes

POSITION ..... ㉟ ㊲ ㊳ ㊵

Vertical positioning of trace.
On even when in PAUSE state.

VERT MODE ..... ㊴

Select vertical axes. Any combination of CH1, CH2, CH3, and CH4 can be selected.

When in single channel mode or ALT mode, the lamps of the selected channels illuminate. For CHOP mode, CH1 and CH2 alone are selectable.

As you press again the switch, the lamp goes off except when in the single channel mode.

The ADD function cannot be used.

ALT, CHOP: Selects ALT or CHOP mode for multi–channel operation.

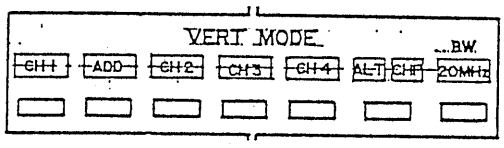

When in ALT mode, the signals are acquired alternately for the selected channels. When TRIG SOURCE ㉔ is set for V–MODE, triggering is made in ALT mode.

8942214

When in CHOP mode, CH1 and CH2 signals are acquired simultaneously.

20MHz BW: Limits the bandwidth of approximately 20 MHz on vertical amplifier. This switch operates independent of other switches.

◦ Time Base (Horizontal Axis)

VARIABLE ..... ⑰ This control remains disabled when in storage mode. Time base is as set by A or B TIME/DIV ⑯ irrespective of setting of this control.

MODE ..... ㉓ Selects sweep mode. Sweep operation differs between the standard sweep mode and the ROLL mode which is selected when the sweep speed is 0.1 s/DIV or slower.

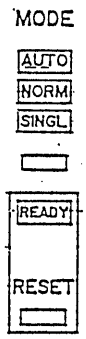

When the standard mode

AUTO: When no triggering signal is applied or triggering signal frequency is lower than 50 Hz, sweep runs automatically in a free run mode.

NORM: When no triggering signal is applied or no triggering is effected, the waveform of the current sweep cycle is kept displayed and the sweep circuit is in the standby state for the next trigger signal.

SINGL: When a triggering signal is applied, sweep runs only for one sweep cycle. When the sweep cycle is over, the READY lamp goes off and the data acquisition function pauses. As you press the RESET switch, the sweep circuit is reset to the READY state (the READY lamp illuminates) and the data acquisition function resumes. The VIEM TIME ㊼ remains in the disabled state.

894215

When in the ROLL mode

AUTO: The Sweep runs automatically in a free run mode, irrespective of triggering signal. Displayed waveform can be made stationary by PAUSE ㊹.

NORM: When the VIEW TIME is OFF:
Sweep runs in a free run mode irrespective or triggering signal.

When the VIEW TIME is ON:
Sweep runs in a free run mode until triggering is effected. When triggering is effcted, waveform becomes stationary at the point set by the TRIG POINT ㊽ and remains in this state for the period set by the VIEW TIME ㊼. When the period has elapsed, the ROLL operation will resume. However, the period for the subsequent 10 DIV's is a hold-off period during which the triggering signal remains ineffective. The triggering signal becomes effective after this period has elapsed. During the hold-off period, TRIG LED ㉙ does not illuminate irrespective of the triggering signal.

SINGL: Sweep runs in a free run mode until triggering is effected. When triggering is effected, displayed waveform becomes stationary at the point set by the TRIG POINT ㊽. When the 10-DIV hold-off period (during which triggering disabled and waveform is displayed in the ROLL mode) has elapsed after you have pressed the RESET switch, the READY lamp illuminates to indicate that triggering is enabled. When triggering is effected, the TRIG lamp ㉙ illuminates, which as well as the READY lamp goes off when a single cycle of sweep is over.

894216

HORIZ MODE ..... ㊱ Select A sweep mode or delayed B sweep mode as described below. The X-Y switch remains disabled.

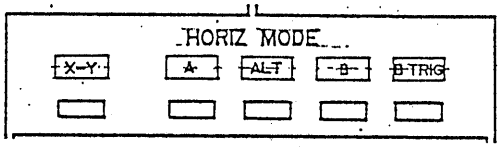

A: A sweep mode for general waveform viewing.

ALT: This mode is to select on A sweep a section of waveform (the section to be magnified on B sweep). Symbol $\overset{\text{DLY}}{\downarrow}$ is displayed above the A sweep waveform to indicate the starting point of magnification. In this case, TRIG POINT automatically becomes 0 DIV.

B: This mode is for continuous delayed sweep operation. Each sweep cycle starts after a period set by B TIME/DIV switch and DELAY TIME POSITION control (READOUT control ㉝) has elapsed. The triggering point is displayed at the left end position (0 DIV position on the graticule).

B TRIG: This switch selects the triggered delay mode. This switch is effective when in ALT or B sweep mode.

B sweep is triggered by B triggering signal when the period set by DELAY TIME POSITION has elapsed.

When this switch is pressed, the AUTO LEVEL ㉗, TRIG SLOPE ㉘ and TRIG LEVEL ㉚ are changed to the B triggering function and the green lamps illuminate to indicate the set status. Of the TRIG SOURCE ㉔ and TRIG CPLG ㉕ also, the green lamps illuminate indicating that they are set for the B triggering function and switch B can be operated.

8942117

◦ CRT Readout

When in the storage mode, the CURSOR SW ㉛ is enabled provided that the HORIZ MODE ㊱ is set for the A sweep mode--it is disabled if the HORIZ MODE ㊱ is set for the ALT or B sweep mode. When you need the DVM function, select the real mode.

CURSOR SW ..... ㉛

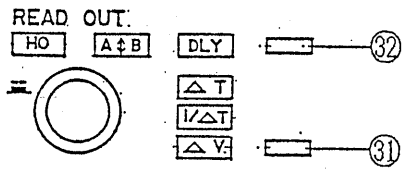

Selects ΔT, 1/ΔT or ΔV measurement with cursors or measurement off when HORIZ MODE ㊱ is set for A sweep mode. As you press this switch, function of READOUT control ㉝ also is changed.

When measuring of any one of the above items, position of the dotted-line cursor is adjustable with READOUT control ㉝. The adjustable range is approximately ±1 DIV from mid-position setting of the control Knob. As you turn the control to the full clockwise or counterclockwise position (to the end position), the cursor moves automatically and continuously. To stop the moving cursor, turn the control in the reverse direction from the end position.

Cursor can be change between that of broken line and dotted line by pressing the knob. When both cursors are of dotted lines, they can be moved on CRT keeping the distance between them constant. Each time as you press the knob, cursor changes in the sequence of broken line → tracking mode → dotted line → tracking mode → broken line.

ΔT: Differential time between two vertical cursors (one with broken line and the other with dotted or broken line) is measured and digitally displayed on CRT.

1/ΔT: Differential time (period) between two vertical cursors (one with broken line and the other with dotted or broken line) is determind and its reciprocal (frequency) is calculated and displayed on CRT.

894218

ΔV: Differential voltage between two horizontal cursors (one with broken line and the other with dotted or broken line) is measured and digitally display on CRT.

Note: Scale factor is as that of CH1, except when CH2 single channel mode is selected by VERT MODE ㊴ in which case scale factor is as that of CH2.

SUB CURSOR SW ..... ㉜ This switch remains disabled regardless of whether HORIZ MODE ㊱ is set for A, ALT, or B sweep mode. HOLDOFF control is disabled when in storage mode.

DVM SW ..... ㉞ Disabled when in storage mode.

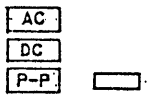

∘ Storage Circuit

MODE ..... ㊶ Selects real mode or storage mode. When in storage mode, STRG lamp illuminates.

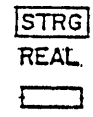

RESPONSE ..... ㊵ This switch selects either sine interpolation or pulse interpolation. This switch is enabled when time base is magnified after PAUSE mode or when SINGLE SWEEP operation is used at ranges higher than the maximum sampling rate (for COM7201A and COM7101A, 1 μs/DIV and higher ranges when in SINGLE SWEEP or ALT mode or 2 μs/DIV and higher ranges when in CHOP mode; for COM7061A, 2 μs/DIV and higher ranges).

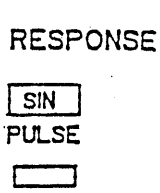

SINE lamp illuminates when in sine interpolation for sine wave. Almost full sine waveform interpolation can be successfully done when the number of the sampled data items per cycle is 3.5 or more.

'90.8.31
89421A

When in pulse interpolation, SINE lamp does not illuminate and the points representing the sampled data values are connected with straight lines. Pulse interpolation is especially effective for interpolation of pulse waves, although it allows almost full sine waveform interpolation for sine waves also when the number of the sampled data items per cycle is 10 or more.

ENV ..... ㊾

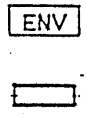

Selects the envelope mode, which displays the maximum and minimum values between sampling points.

The envelope mode allows you to identify narrow pulses which may exist between sampling clock pulses and detect aliasing when input signal frequency is higher than one half of the sampling frequency.

This switch is enabled when range setting is 50 ms/DIV to 10 μs/DIV and ENV lamp illuminates.

When in the envelope mode, the waveform which is in the PAUSE state cannot be displayed with magnification.

TRIG POINT ..... ㊽

This switch selects a pretriggering point when in regular sweep mode or a sweep start point after pause for sweep magnification.

The pretriggering point changes in the sequence of 0 DIV, 2 DIV, 4 DIV, 6 DIV and 8 DIV as you press this switch. Thus, this switch allows you to view waveform which existed before tiggering. When in this mode, symbol $\overset{\text{TRIG}}{\downarrow}$ is displayed on CRT. As you press PAUSE ㊹, acquiring of new waveform ceases and symbol $\overset{\text{MAG}}{\downarrow}$ is displayed instead of $\overset{\text{TRIG}}{\downarrow}$, indicating that the starting point for sweep magnification is selec-table with this switch. Each time as you press this switch, the point moves in 1-DIV step. Up to 11 points are selectable.

894220

When in the above state, sweep can be magnified up to 100 times by turning A.B TIME/DIV ⑯ to right and left from the position indicated by symbol MAG ↓.

VIEWTIME ..... ⑰

Selects a period during which same waveform is kept displayed on CRT, for approximately 1 sec, 3 sec, 10 sec, and off (continuous viewing of displayed waveforms).

View time is indicated on CRT with a triangular symbol as follows.

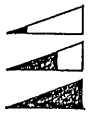
: Approx. 1 sec
: Approx. 3 sec
: Approx. 10 sec

This switch is disabled when in REPERT mode or SINGLE SWEEP mode.

REF MEMORY ..... ⑯

Select reference memory units for saving of data of up to 4 waveforms.

SAVE ..... ⑮

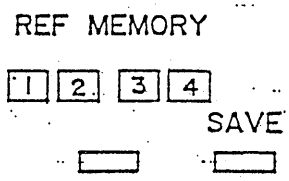

Data is saved as you press PAUSE ⑭ to halt acquiring of data, press REF MEMORY ⑯ to select a memory unit or units in which data is to be stored, and then press SAVE ⑮.

The memory units which are selectable by pressing REF MEMORY ⑯ are as follows.

When in single channel mode:

Any one of memory units 1 – 4 can be selected.

When in 2–channel mode:

Combination of memory units 1 and 2 or memory units 3 and 4 can be selected. The left most selected channel of the VERT MODE ㊴ is assigned to an odd–number memory unit.

When in 3-channel mode:

The channels selected by VERT MODE ㊴ are assigned to the corresponding numbers of memory units.

When in 4-channel mode:

The four channels are assigned to the four corresponding numbers of memory units.

PAUSE ..... ㊹

The current waveform is kept displayed continuously, halting acquisition and display of a new waveform. As you press the switch again, the halted state is released.

Transfer of data into reference memory and sweep magnification up to 100 times are enabled only when in the PAUSE mode. (See Section 5.1 (9) PAUSE.)

LOCAL SW ..... ㊸
(2nd FUNCTION KEY)

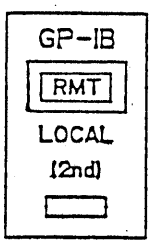

Selects either the remote control mode with GP-IB or the local control mode with panel switches. When in the remote control mode, the RMT lamp illuminates.

This switch acts also as a second function key. If you press the switch together with X-Y of HORIZE MODE ㊱, contents of reference memory are delivered via X-Y recorder output terminal on rear panel. If you press the switch together with GND of COUPLING ⑨ ⑬ ⑮ ⑲, the vertical scale factor is changed for direct use with 10:1 probes. If you press the switch together with DVM SW ㉞, the calibration verifiction mode for vertical and horizontal axes is effected. If you press the switch together with SUB CURSOR switch ㉜, the initial mode set function for resetting the instrument to the initial state when its operation has become abnormal is effected.

'90.8.31
89422A

4.3 Description of Rear Panel

This section gives descriptions of the rear panel items, referring to Figure 4-3.

CH1 OUT ..... ⑫ Delivers CH1 output signal of approximately 50 mV/DIV. When 50-ohm terminated, output voltage is approximately 25 mV/DIV.

Z AXIS IN ..... ⑬ Accepts an external intensity modulation signal. Trace becomes dim with positive-going signal. Clearly discerniable intensity modulation is effected with 3 Vp-p signal.

B GATE ..... ⑭ Delivers positive TTL-level gate signal corresponding to B sweep.

A GATE/SYNC OUT ..... ⑮ Delivers positive TTL-level gate signal corresponding to A sweep.

When PEN output signal is delivered in storage mode of COM7201A, COM7101A or COM 7061A, positive TTL-level sync output signal corresponding to PEN output signal is delivered.

A SWEEP/PEN X OUT ..... ⑯ Delivers A sweep output signal of 0 to approximately +1 V. When in storage PEN output mode of COM7201A, COM7101A or COM7061 this terminal delivers X-axis output of 0 to approximately +1 V.

PEN Y OUT ..... ⑰ Delivers Y-axis output of 0 to approximately ±0.5 V when in storage PEN output mode.
For COM7201A, COM7101A, and COM7061A only

89423

Power Connector and Fuse	⑱	AC line power connector which act salso as fuse holder. To replace the fuse, disconnect the power cord and then ply the nail of the fuse with a screwdriver.
Studs (Cord Takeups)	⑲	Act as studs and also as cord takeups.
GP-IB Connector ..... For COM7201A, COM7101A and COM7061A only	⑫	Connector which complies with IEEE- 488-1978 GP-IB Standards.
GP-IB Switches ..... For COM7201A, COM7101A and COM7061A only	⑬	For setting of talk address (MTA) for response by interface and control of TALK ONLY (TON) local messages.
REMOTE Connector ..... For COM7201A, COM7101A and COM7061A only	⑭	For connection to Remote Controller RC01-COM or Probe Selector PS01-COM. For the RC01-COM and PS01-COM, refer to respective instruction manuals.
PROBE POWER ..... For COM7201A and COM7200A	⑪	Provide power for active probes
Fan	⑩	Cooling fan air outlet Note: Pay attention so that air flow from the outlet is not impeded.

8942224

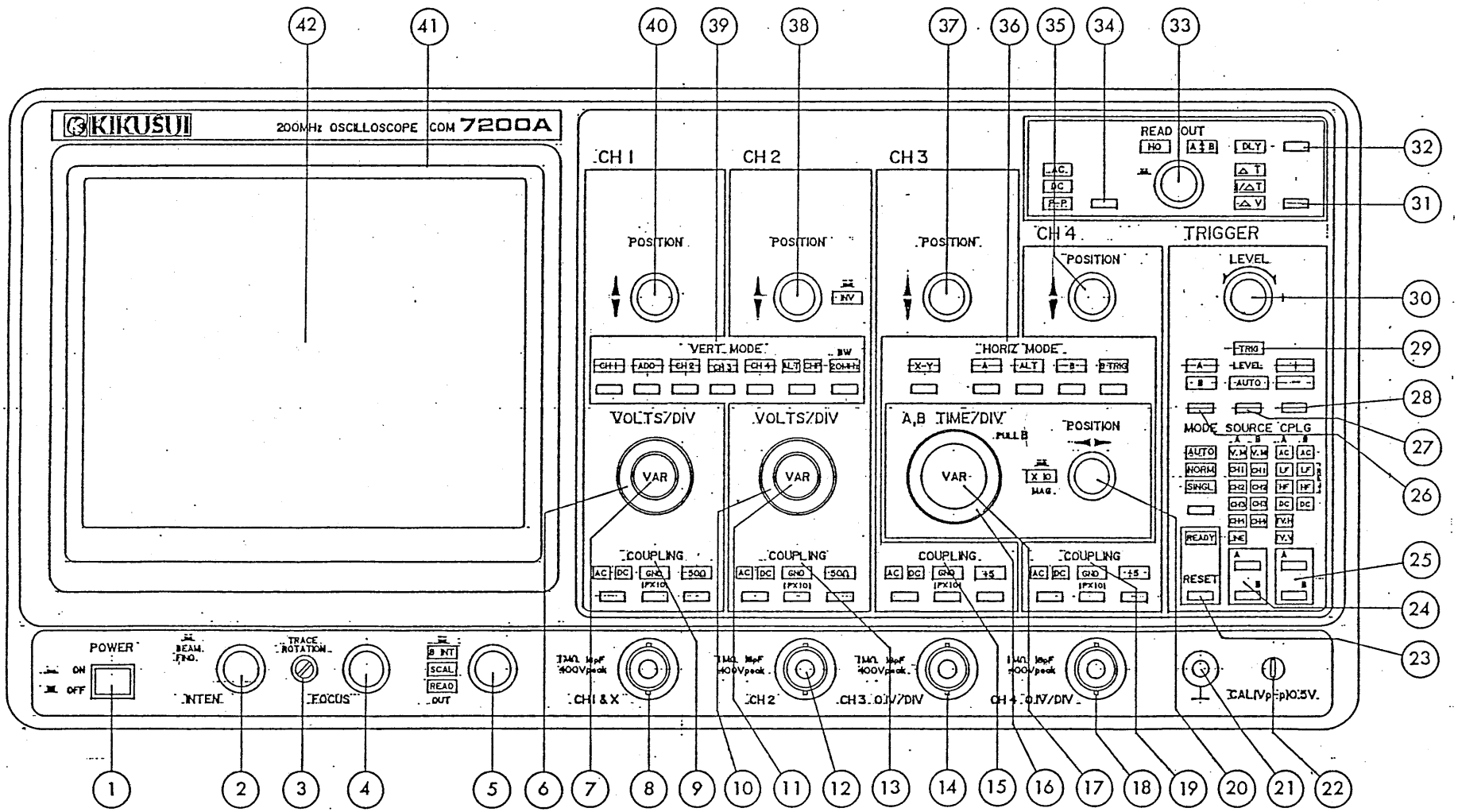

Figure 4-1. Front Panel of COM7200A

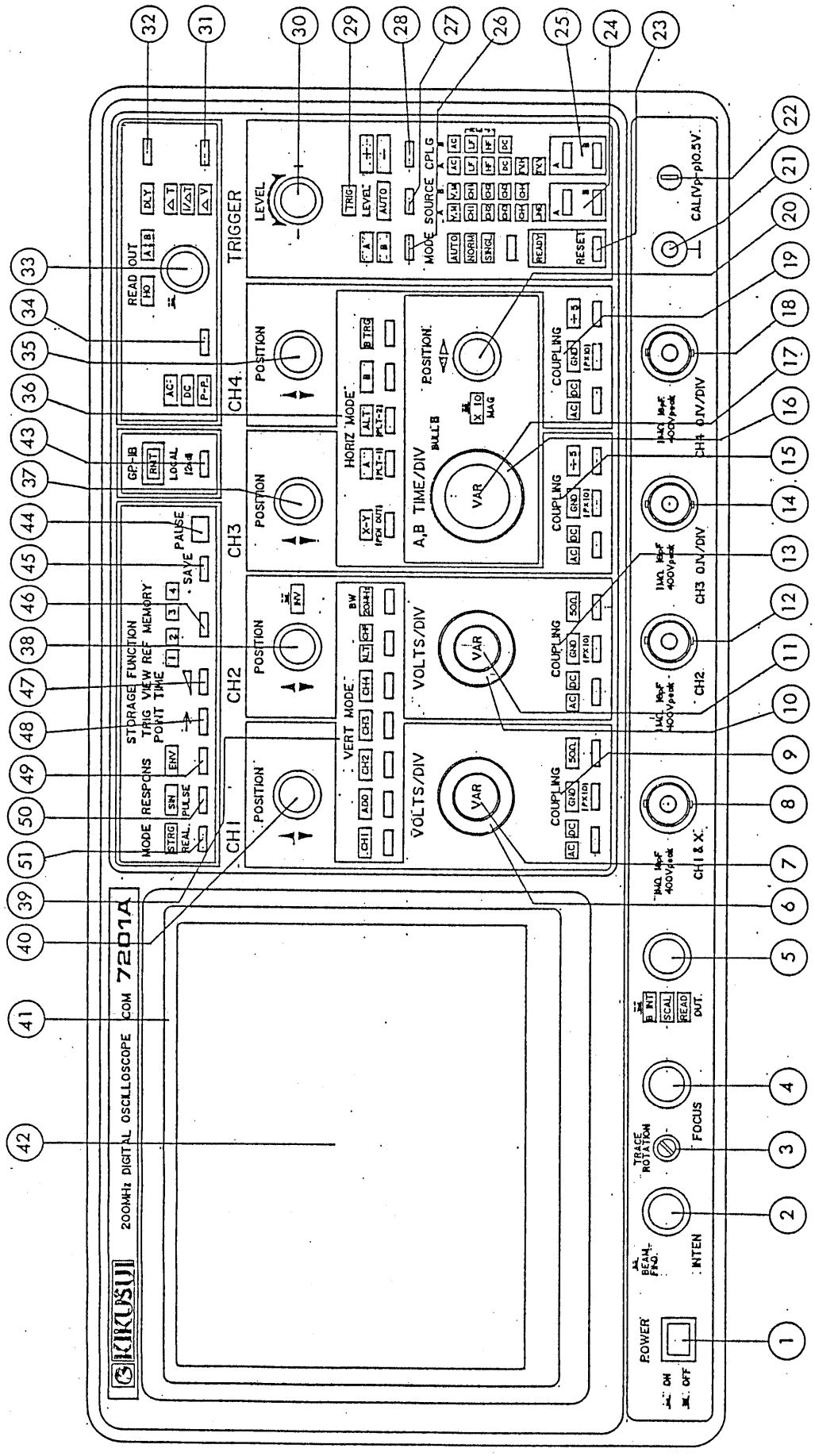

Figure 4-2. Front Panel of COM7201A

894226

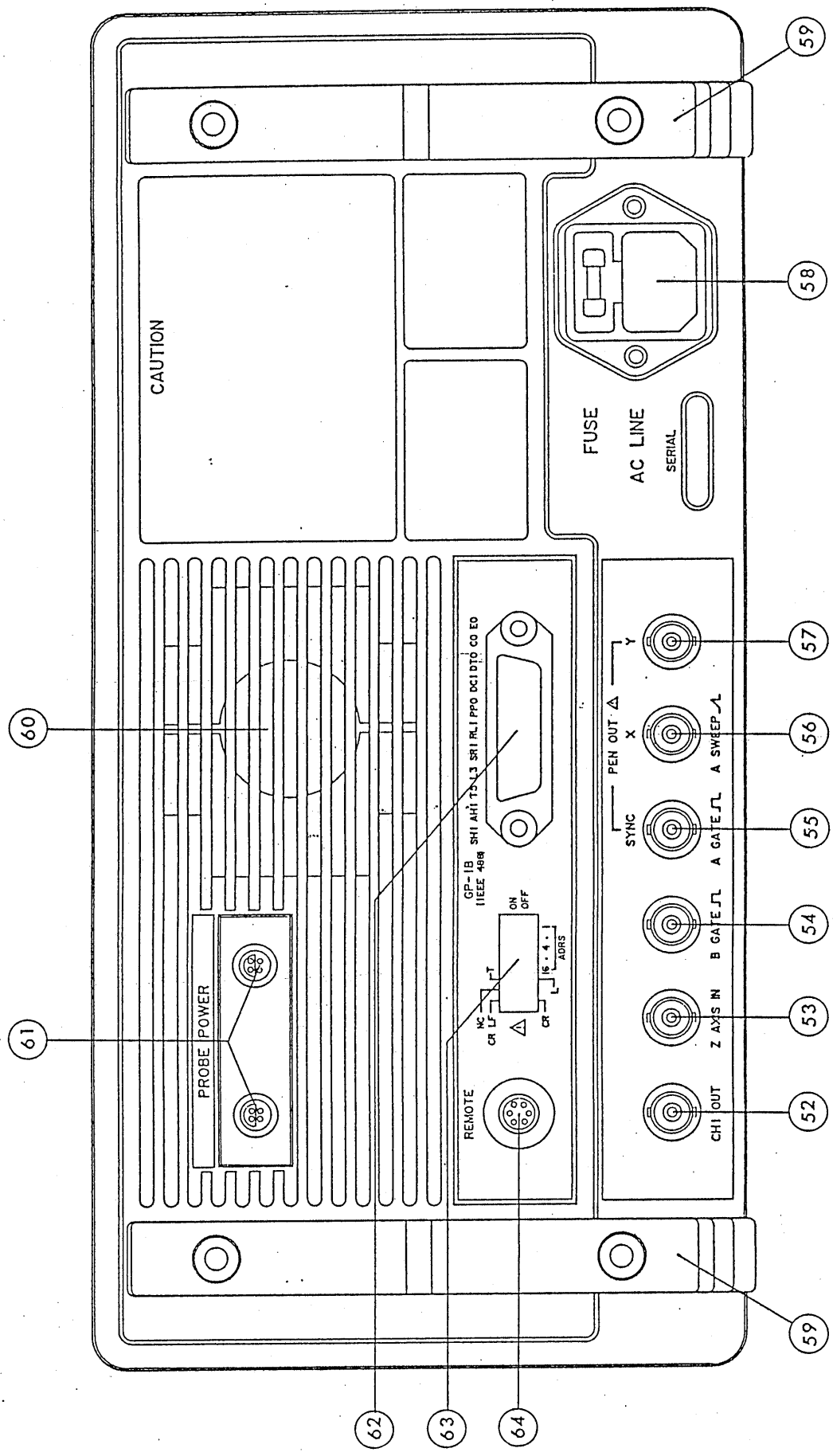

Figure 4-3. Rear Panel

894227

4.4 Description of CRT Readout

o This section explains the CRT readout of COM7201A, COM7101A and COM7061A when in the real mode and that of COM7200A, COM7100A and COM7060A.

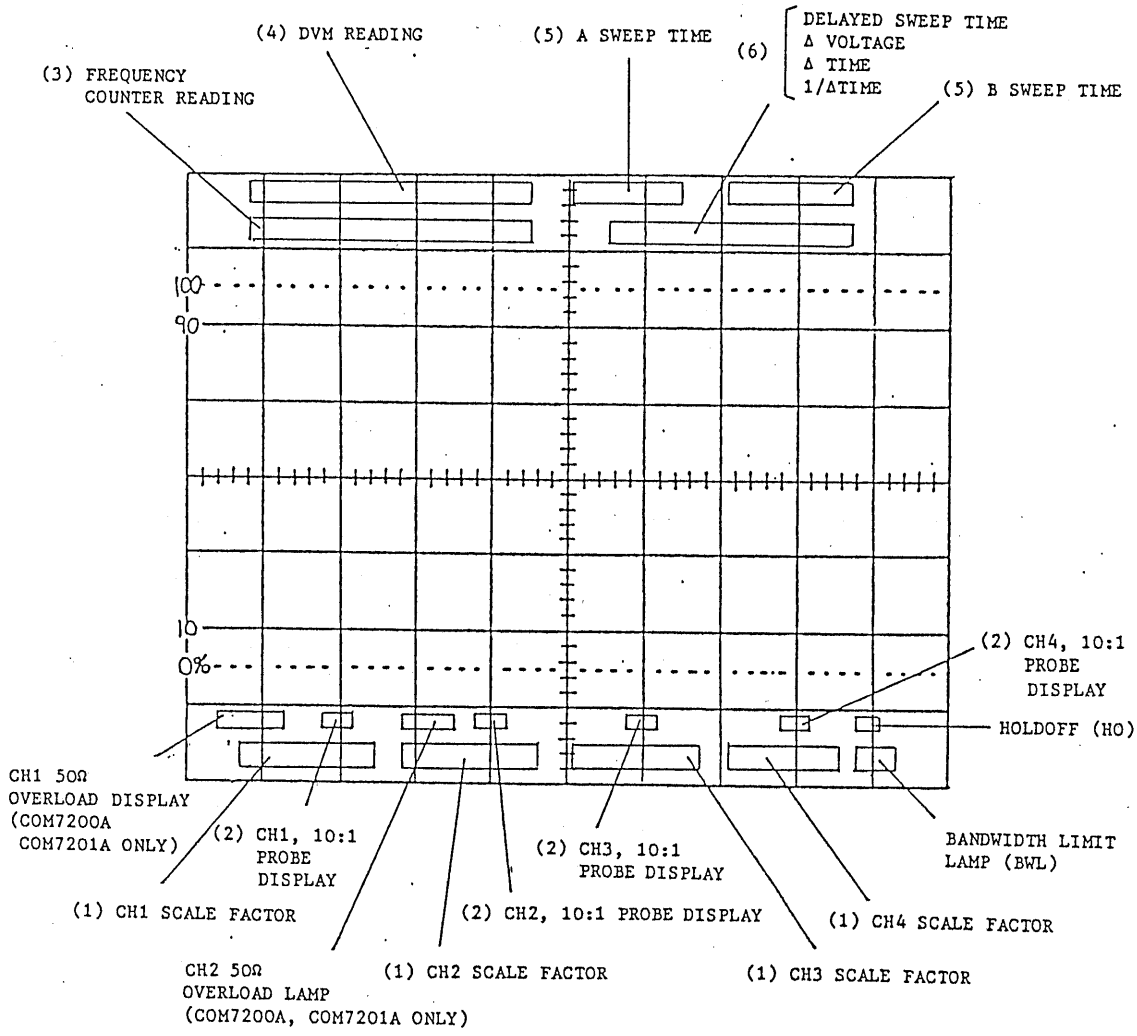

(1) CH1 - CH4 scale factor

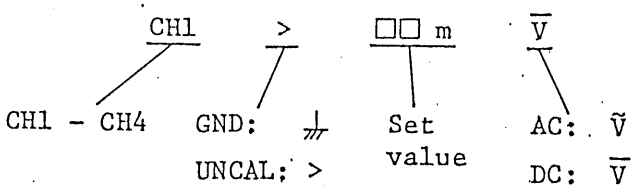

89 42 28

(2) 10 : 1 probe display: P × 10

(3) Frequency counter reading

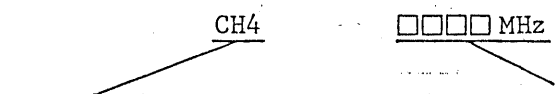

(4) DVM reading

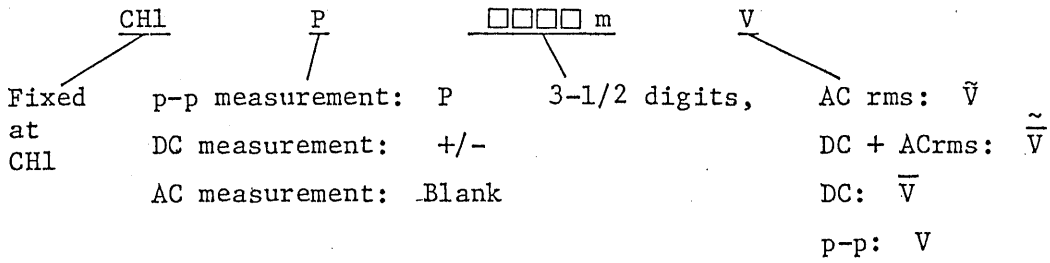

(5) A/B sweep time

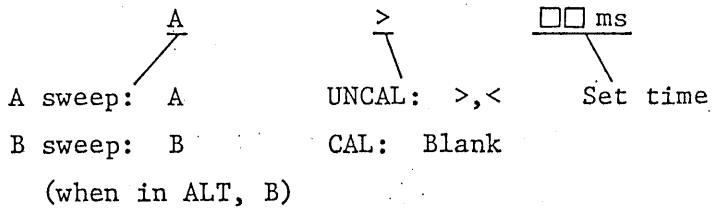

(6) Delayed sweep time

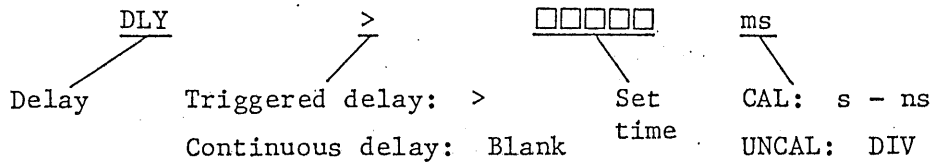

(6) ΔT measurement

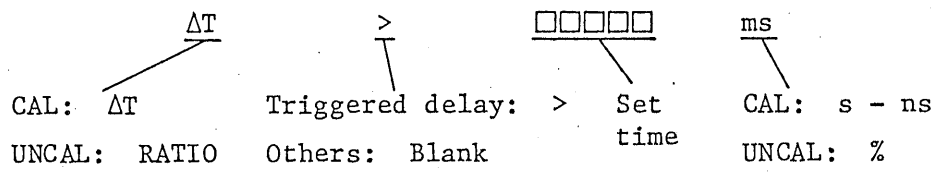

8904229

(6) 1/ΔT measurement

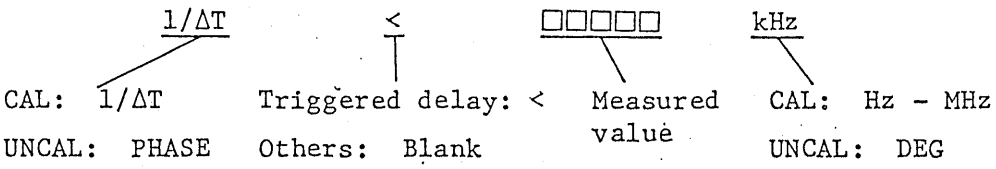

(6) ΔV measurement

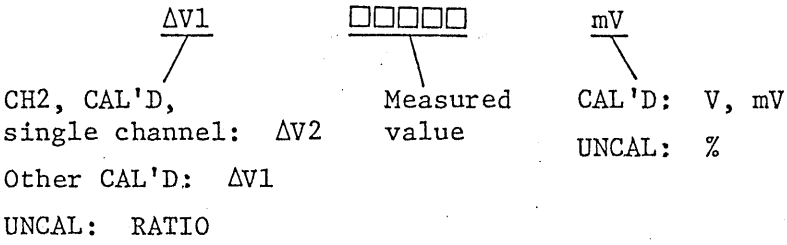

89 42 30

o This section explains the CRT readout of COM7201A, COM7101A and COM7060A when in the storage mode.

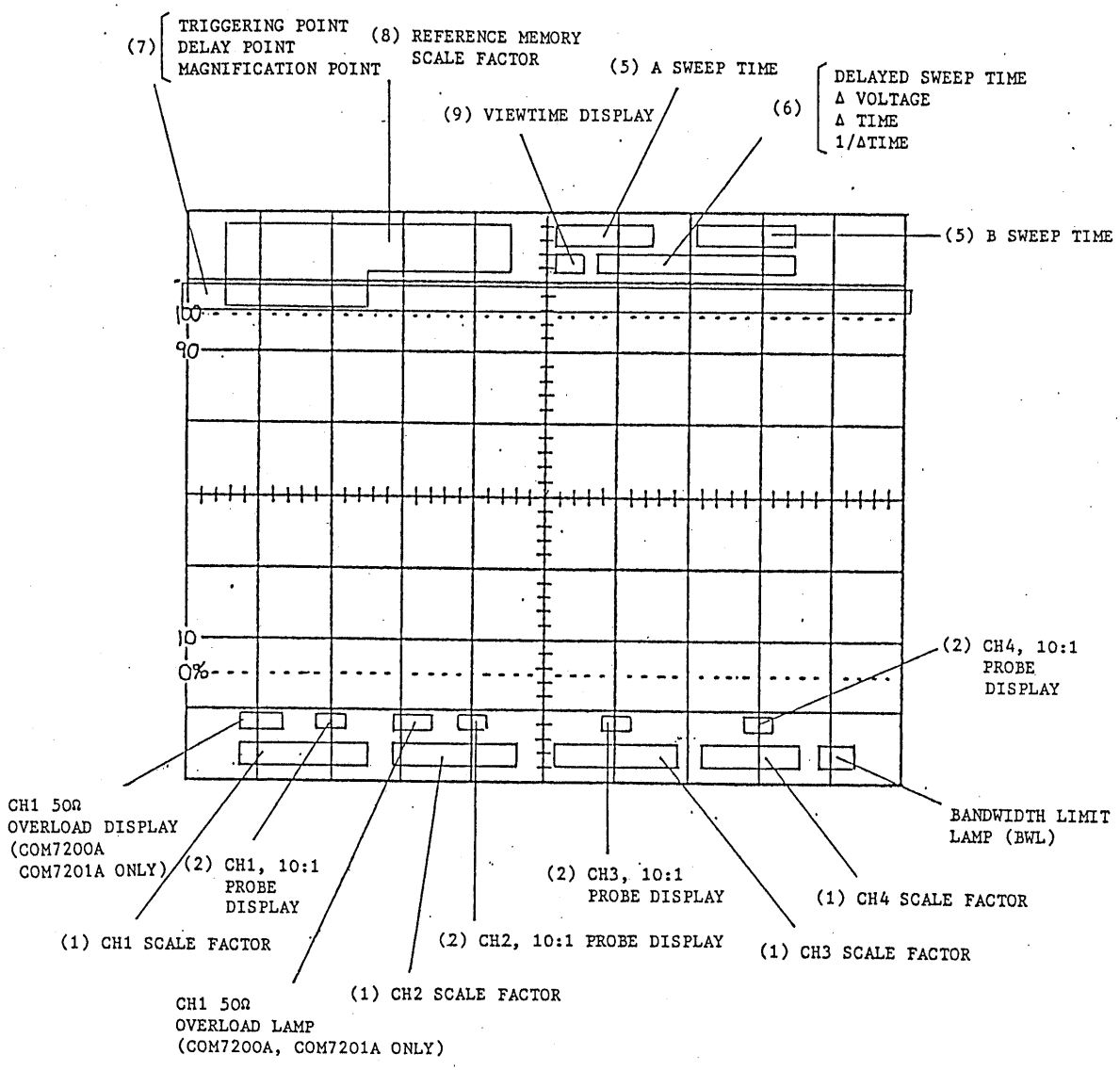

89 42 31

(7) Triggering point, delay point and magnification point

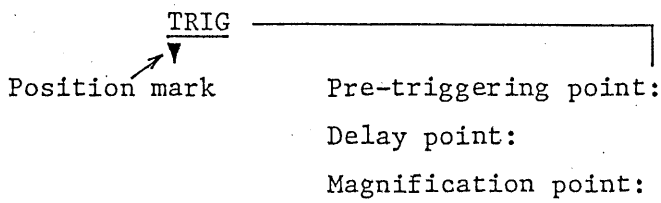

(8) Reference memory scale factor

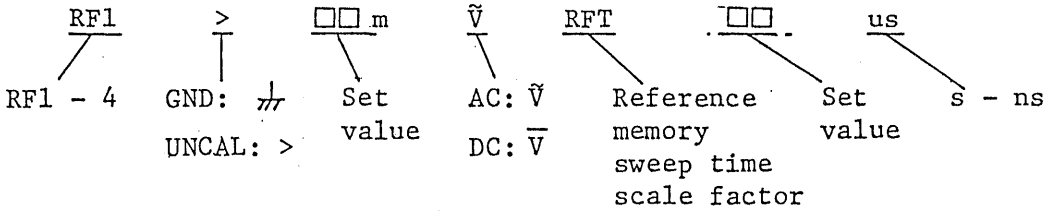

(9) Viewtime display

Continuous: Blank

Approx. 1 sec:

Approx. 3 sec:

Approx. 10 sec:

8942332

4.5 Initial Setting

To operate the oscilloscope, set initially the panel switches and controls as instructed in this section. For the storage mode, refer to Section 5.1.

Note: Be sure to rotate each control knob 30 degrees or more from the existing position. Note that the positional date of the control may not be correctly recognized unless it is turned as above.

1) Turn on the POWER ① switch.

2) Press the READOUT ⑤ knob the required number of times to select the readout intensity control function. Set the knob at a mid-position and check that readout is displayed on CRT. Adjust focusing with the FOCUS ④ control.

3) Set the switches and controls as follows.

Switch or Control	No.	Setting
INTEN	②	3 o'clock position
SCALE	⑤	Fully counterclockwise
VERT MODE	㊴	CH1 only.
POSITION	㊵	Mid-position
VOLTS/DIV	⑥	10 mV/DIV (displayed on CRT)
VAR	⑦	CAL'D (pushed-in state)
COUPLING	⑨	GND (AC or DC)
A.B TIME/DIV	⑯	0.5 ms/DIV
VAR	⑰	CAL'D (pushed-in state)
SWEEP MODE	㉓	AUTO (top position)
TRIG SOURCE	㉔	V-MODE, CH1 (top position)
TRIG CPLG	㉕	AC (top position)
A/B TRIG	㉖	A (disabled)
LEVEL AUTO	㉗	AUTO
SLOPE	㉘	+
TRIG LEVEL	㉚	Mid-position (disabled)
CURSOR SW	㉛	HO
SUB CURSOR SW	㉜	Disabled

To be continued

89423

Switch or Control	No.	Setting
READOUT CONTROL	㉝	Fully counterclockwise (HOLDOFF function off)
DVM SW	㉞	Off
POSITION	⑳	Position where trace is displayed at center of CRT
STORAGE MODE	㊶	REAL (for digital type of oscilloscopes only)
HORIZ MODE	㊱	A

4) When above setting is done, a trace will appear on CRT. If no trace appears even when more than 60 seconds has elapsed after the above setting is done, repeat the procedure of (3).

5) When the trace is displayed, adjust it with the INTEN ② control and FOCUS ④ control.

6) Adjust the trace so that it is parallel with the graticule lines by turning the TRACE ROTATION ③ control with a screwdriver. This adjustment will be necessary each time as you remove the oscilloscope is moved its direction.

4.6 Calibration of Probes

The probes act as wide frequency band attenuators. Unless they are properly adjusted for phase compensation, displayed waveform may be distorted and measuring errors may be introduced. Be sure to properly calibrate them before measurement.

894234

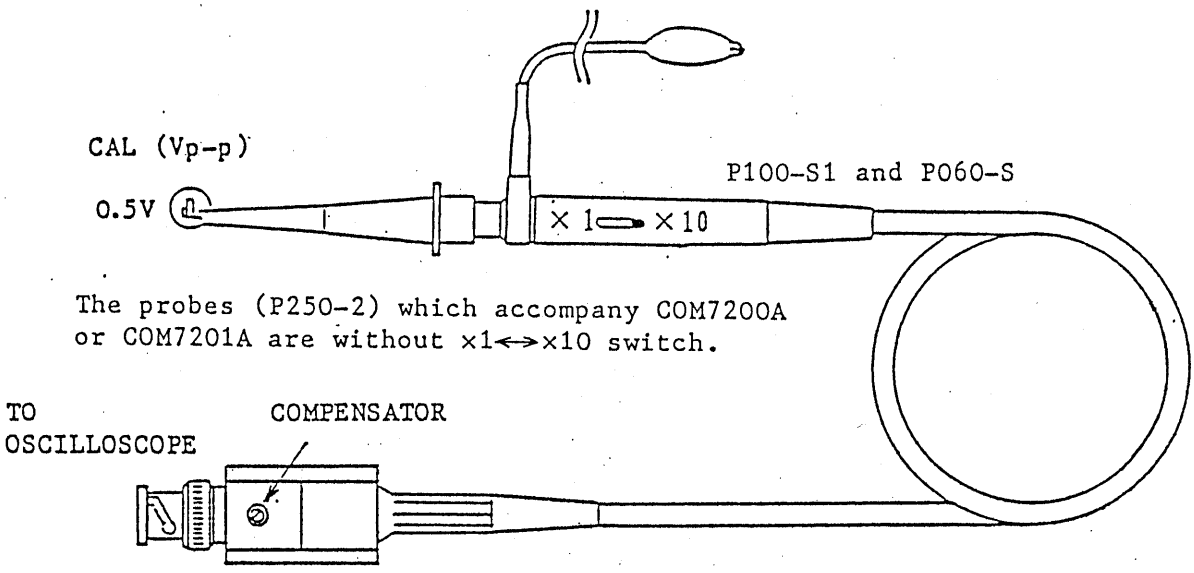

Figure 4.6

To calibrate the probes use the signal of the CAL ㉒ terminal on the front panel of the oscilloscope and proceed as follows:

Connect one of the probes to the CH1 INPUT ⑧ terminal and set the VOLTS/DIV ⑥ switch at 10 mV. For Type P100-S1 or P060-S Probe, set the switch at ×10. Connect the probe tip to the CAL terminal. Observing the waveform displayed on the CRT, adjust the compensator (see Figure 4-6) with a screwdriver so that an ideal waveform is obtained.

Calibrate the other probe for CH2 in the same method as above.
When using a probe with its switch set at ×10, change the readout factor refering to Section 4.7.

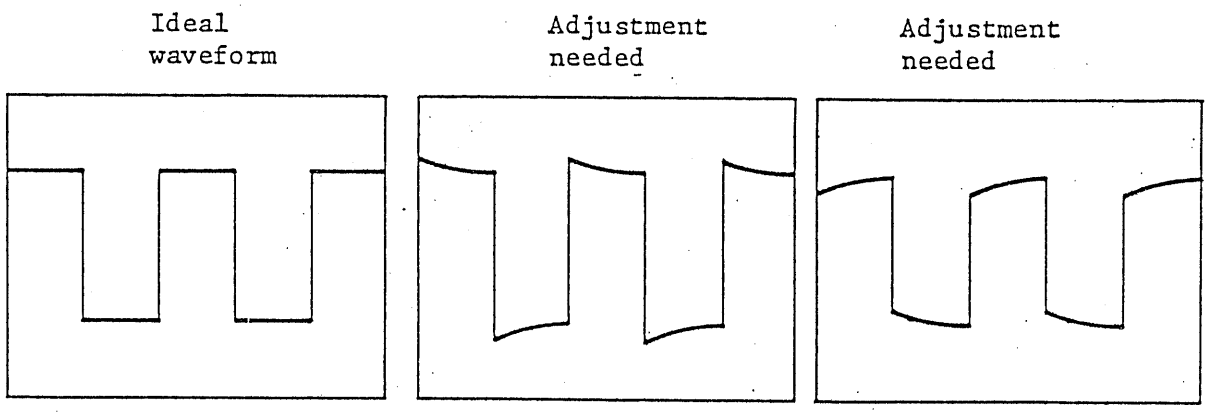

Figure 4-7

89423S

4.7 To Change Readout Factor for Probe

The values of vertical deflection factor and ⊿V measurement displayed on the CRT readout are as that of the signal at the probe tip. When a 10:1 probe is used, the factor for displaying the value on the CRT readout can be changed to display directly the value at the probe tip.

To change the factor, proceed as follows: For COM7200A, COM7100A or COM7060A, press the GND switch of COUPLING ⑨ ⑬ ⑮ ⑲ of the channel to which the probe is connected within the period the CRT is in the beam find status after pressing the INTEN ② knob once and releasing your hand from the knob.
For COM7201A, COM7101A or COM7061A, press the same switch together with the 2ND FUNCTION KEY ㊸ switch. When this is done, the value indicated on the CRT readout is multiplied by a factor of 10 on the selected input and a message "P ×10" is displayed on the CRT.

To reset the reqular state from the above state, repeat the same procedure as above.

4.8 Beam Finder

When the trace is deflected and lost from the CRT screen or when its intensity is insufficient and it is undescernible, you may press the INTEN ② knob so that an intensified trace is displayed on the CRT screen for a few seconds.

The key acts also as a second function key to be pressed togehter with other keys, for such functions as self calibration, probe-use display change, resetting, etc.

4.9 2-channel Mode (except COM7201A, COM7101A and COM7061A in storage Mode)

If you press the CH2 key of VERT MODE ㊴ selector in addition to the setting for CH1 single channel mode of Section 4.5 (3), the oscilloscope operates in a 2-channel mode with CH1 and CH2, the CH1 and CH2 indicator lamps illuminate, and the vertical deflection factors of these channels are displayed at the bottom of the CRT.

894236

When in this mode, the ALT or CHOP lamp of VERT MODE ㊴ illuminates. Either the ALT or CHOP sweep mode is selectable. For measurement of rapidly changing signals or higher frequency signals, use the ALT sweep mode to sweep the traces alternately (if the CHOP mode is used, the displayed traces may become dotted lines due to chopping). For measurement of slowly changing signals or lower frequency signals, use the CHOP mode to sweep the traces being chopped by a high frequency (if the ALT mode is used, the displayed traces may flicker due to low-frequency alternate sweeps).

Regardless of the above, however, the CHOP sweep mode may be used even when a higher sweep speed is employed if there are irregular phenomena to be measured at the same time. In addition to the above, the ALT sweep mode may be used when the frequencies of the two channel signals are not correlated and alternate triggering is needed.

Any combination of two of the four channels (CH1 – CH4) can be selected with the VERT MODE ㊴ switch for this 2-channel mode of operation.

4.10 ADD Mode (except COM7201A, COM7101A and COM7061A in storage mode)

When the ADD switch of VERT MODE ㊴ is pressed and channels CH1 and CH2 only are selected, a waveform representing the algebraic sum of the two channel signals is displayed on the CRT. When the CH2 POSITION ㊳ knob is pushed in and the INV lamp has illuminated, a waveform representing the algebraic difference between the two channel signals is displayed.

For accurate ADD operation, adjust in beforehand the vertical deflection factors of the two channels to the same value with VARIABLE ⑦ ⑪ controls.

When in the ADd mode, both POSITION ㊵ ㊳ controls are enabled. To maintain good linearity of the vertical amplifiers, use the central sections of the position controls.

8942237

4.11 X-Y Mode (except COM7201A, COM7101A and COM7061A in storage mode)

As you press the X-Y key of HORIZ MODE ㊱ selector, the X-Y lamp illuminates and the oscilloscope operates in an X-Y mode with the CH1 signal as X-axis signal. In this case the indicator lamps related to triggering go off and the switches related to triggering remain disabled. If the frequency counter function is selected by pressing the DVM switch ㉞, however, the SOURCE ㉔, CPLG ㉕, LEVEL AUTO ㉗, SLOPE ㉘ and LEVEL ㉚ are enabled and their indicator lamps illuminate.

If you press the X-Y switch when the oscilloscope is operating in the regular sweep mode and in CH1 or CH2 single channel mode or in CH1 and CH2 dual channel mode, the oscilloscope operation is automatically changed to an X-Y operation with CH1 as X-axis and CH2 as Y-axis.

By selecting with VERT MODE ㊴ switch any one or combination of CH2, CH3 and CH4, operate as Y-axis channels in X-Y mode. In this case the traces are swept in the CHOP mode and the indicator lamps of the selected Y channels of VERT MODE ㊴ illuminate.

To return to the regular mode from the X-Y mode, press the A, ALT or B switch of HORIZ MODE ㊳.

4.12 3-channel or 4-channel Mode (except COM7201A, COM7101A and COM7061A in storage mode)

If you press all of the CH1, CH2, CH3 and CH4 switches of VERT MODE ㊴ the oscilloscope operates in a 4-channel mode and four traces are displayed on the CRT. If you press the ADD switch also, fifth traces will be displayed representing an algebraic sum of the CH1 and CH2 signals.

As above, the oscilloscope is able to display from a single trace up to five traces simultaneously on its CRT screen. The traces can be successfully triggered and displayed by alternate triggering even when there are no correlations among the channel signal frequencies, provided that VERT MODE ㊴ is set for ALT, LEVEL AUTO ㉗ is set for OFF, and SOURCE ㉔ is set for V-MODE.

8904238

4.13 Voltage Measurement

The oscilloscope allows you three types of voltage measurement. First, voltage can be determined by means of the CRT graticule. Second, ⊿V (differential voltage) between two points can be determined by means of cursors. Third, the CH1 input signal voltage can be directly measured with the internal digital voltmeter.

1) ⊿V Measurement (except in ALT, B sweep mode or X-Y mode)

The ⊿V lamp illuminates and two horizontal cursors (one with dotted line and the other with broken line) are displayed on the CRT as you press CURSOR SW ㉛ when HORIZ MODE ㊱ is set for A sweep. Position of the broken line cursor is vertically adjustable with the READOUT control ㉝. Move the cursor to the required measuring point with the control.

Next, press twice the READOUT control ㉝ and the broken line cursor will become a dotted line cursor and the dotted line cursor will become a broken line cursor after both cursors becoming dotted line cursors. Now move the new broken line cursor to the required measuring point in the same manner as above.

The differential voltage is digitally displayed on CRT with the scale factor of VOLTS/DIV ⑥ ⑩ of CH1, except when in a single channel mode with CH2 or multi-channel mode with CH2 plus CH3 and/or CH4 in which case the scale factor of CH2 is employed.

When both cursors are broken lines, they are in the tracking mode and they can be moved on the CRT keeping the distance between them constant.

The range is adjustable with the READOUT control ㉝ to approximately 1 DIV in upward and downward directions from the mid-position of the control knob. As you turn the control to the full clockwise or counterclockwise position (to the end position), the cursor moves automatically and continuously. To stop the moving cursor, turn the control in the reverse direction from the end position.

Measurement of ⊿V with cursors is enabled only when the HORIZ MODE ㊱ selector is set for the A sweep mode. It is disabled when the selector is set for the ALT, B, or X-Y mode.

8942389

When in a single channel mode with CH3 or CH4 alone, or dual trace mode with CH3 and CH4, ΔV measurement is disabled and ratio measurement is enabled in its stead, and the measured voltage ratio is displayed on CRT readout.

2) DVM Measurement (except COM7201A, COM7101A and COM7061A in storage mode)

If you press the DVM SW ㉞ when a signal is applied to CH1 input, the DVM lamp illuminates and the CH1 input signal voltage is measured by the internal DVM and digitally displayed at top left on the CRT screen.

When AC is selected by DVM SW ㉞, the true-rms value of the signal for 20 Hz – 100 kHz is measured. If the input COUPLING ⑨ switch is set for AC, the rms value of the AC signal is measured; if the switch is set for DC, the DC + AC rms value is displayed. The displayed units of measure are $\tilde{V}$ and $\tilde{V}$, respectively.

When DC is selected by DVM SW ㉞, the DC voltage of the CH1 input signal is measured. For this DC voltage measurement, the input COUPLING ⑨ switch must be set for DC. (If it is set for AC, a symbol "?" is displayed on the CRT.) The displayed unit of measure is V.

When p-p is selected by DVM SW ㉞, the peak-to-peak voltage of the CH1 input signal for 20 Hz – 10 MHz is measured. The displayed unit of measure is V, with suffix P for identification.

The DVM measurement is for CH1 input signal only. The signal is measured and displayed even when CH1 is not selected by VERT MODE ㊴. Even when in the X-Y mode, the CH1 signal (X-axis signal) is measured and displayed if DVM SW ㉞ is selected.

Note, however, that large measuring errors may occur for extremely large (such as overflowing from the CRT screen) or small signals.

When the STORAGE mode is selected by the MODE SW ㊶ DVM measurement ceases and no measured the oscilloscope to the REAL mode, DVM measurement resumes with the function settings as existed before.

894240

4.14 Voltage Ratio Measurement (except in ALT, B sweep mode or X-Y mode)

The ratio of the voltage of a signal with respect to the voltage of a reference signal can be measured. A typical example is measurement of the ratio of an overshoot voltage with respect to a reference voltage.

For voltage ratio measurement, proceed as follows: Display two cursors on the CRT with the procedure of Section 4.13 (1). Move the cursors to the 0% position and 100% position of the graticule with the READOUT control ㉝. Apply the signal to be measured to the CH1 input terminal ⑧ and adjust its amplitude to 5 DIV with the VARIABLE ⑦ control. A message "RATIO 100.0%" will be displayed on the CRT. Next, move the cursors to the positions for the required voltage section (for example, overshoot section of a pulse wave). The ratio (percent) of the section with respect to the reference amplitude (5 DIV for 100%) will be directly indicated on the CRT.

For voltage ratio measurement when in a single trace mode with CH1 or CH2 or when in a multi-trace with CH1 and other channels, set the VARIABLE ⑦ control to the UNCAL state. For voltage ratio measurement when in a single trace mode with CH2 or 2-trace mode with CH2 and ADD or multi-channel mode with channels except CH1, set the VARIABLE ⑪ control to UNCAL state. For voltage ratio measurement when in 2-trace mode with CH3 and CH4, the voltage levels of the input signals must be set at 5 DIV as displayed on the CRT.

8942 41

4.15 Time Interval Measurement (except COM7201A, COM7101A and COM7061A in storage mode)

The time interval ⊿T (differential time or period) between two vertical cursors can be measured. (Typical examples are measurement of rise and fall time of pulse waves, and measurement of the period between two points on a signal.)

For time interval measurement, proceed as follows: When HORIZ MODE ㊱ is set for A sweep, press CURSOR SW ㉛. The ⊿T lamp will illuminate and two vertical cursors, one with dotted line and the other with broken line, will be displayed on the CRT. Move the broken line cursor with the READOUT control ㉝ to a measuring point on the waveform (for example, to the 10% amplitude point on a pulse wave). Next, press twice the READOUT control ㉝. The types of the cursor lines will be changed between dotted line and broken line, after both cursors have changed to broken lines. Move the new broken line cursor to another measuring point on the waveform (for example, to the 90% amplitude point on the pulse wave). The time interval between the two points (the rise time of the pulse wave in this example) is measured with the scale factor set by the A TIME/DIV ⑯ switch and the measured value is digitally displayed on the CRT.

When both cursors are with broken lines, they are in the tracking mode and they can be moved on the CRT keeping the distance between them constant.

The range adjustable with the READOUT control ㉝ is approximately 1 DIV to right and left from the mid-position of the control knob. As you turn the control to the full clockwise or counterclockwise position (to the end position), the cursor moves automatically and continuously. To stop the moving cursor, turn the control in the reverse direction from the end position.

Measurement of ⊿T with cursors is enabled only when the HORIZ MODE ㊱ selector is set for the A sweep mode. When it is set for the ALT or B sweep mode, ⊿T measurement with delayed sweep can be done.

89424

4.16 Time Ratio Measurement (except COM7201A, COM7101A and COM7061A in storage mode)

The ratio (percent) of a time interval with respect to a reference time interval is measured using two vertical cursors as in the case of ΔT measurement. A typical example is measurement of duty cycle of pulsed waveforms.

To measure duty cycle of a pulse wave, for example, proceed as follows: Set the oscilloscope as in the case of ΔT measurement. Adjust the sweep span of one cycle of the displayed waveform to 5 DIV (100%) with the SWEEP VARIABLE ⑰ control. (Hereafter, exercise care so that the set position of the control is not disturbed so far as this measurement is continued.) Move the two cursors to the two measuring points (rise and fall edge) of the pulse using the READOUT control ㉝. The duty cycle of the pulse wave will be digitally displayed in percent on the CRT.

89 42 43

4.17 Frequency Measurement

The oscilloscope allows you three types of frequency measurement. First, by determining the period of one cycle of the signal on the graticule and calculating the reciprocal of the period. Second, by 1/ΔT measurement with cursors. Third, by direct measurement of the internal frequency counter displayed on the CRT.

1) 1/ΔT Measurement (except COM7201A, COM7101A and COM7061A in ALT or B sweep mode of storage operation)

For 1/ΔT measurement, proceed as follows: Set HORIZ MODE ㊱ for A sweep; press CURSOR SW ㉛. The 1/ΔT lamp will illuminate and two vertical cursors, one with broken line and the other with dotted line, will appear on the CRT. Move horizontally the broken line cursor with the READOUT control ㉝ to a measuring point (for example, to the rise up point of a pulse wave). Next, press twice the READOUT control ㉝. The types of cursor lines will be changed between dotted line and broken line, after both cursors being changed once into those with broken lines. Now move the new broken line cursor to another measuring point (for example, to the rise up point which is apart by one cycle from that where the previous broken line cursor was set). The signal frequency calculated as the reciprocal of the period between the two cursors with the scale factor set by A TIME/DIV ⑯ will be digitally displayed on the CRT.

When both cursors are lines, they are in the tracking mode and they can be moved on the CRT screen keeping the distance between them constant.

The range adjustable with the READOUT control ㉝ is approximately 1 DIV to right and left from mid-position of the control knob. As you turn the control to the full clockwise or counterclockwise position (to the end position), the cursor moves automatically and continuously. To stop the moving cursor, turn the control in the reverse direction from the end position.

Measurement of 1/ΔT with cursors is enabled only when the HORIZ MODE ㊱ selector is set for A sweep mode. When it is set for the ALT or B sweep mode, 1/ΔT measurement with delayed sweep can be done.

8942441

2) Measurement with Frequency Counter (except COM7201A, COM7101A and COM7061A in storage mode)

When the DVM function is enabled by pressing DVM SW ㉞, the signal frequency of the channel selected as triggering signal source by the TRIG SOURCE ㉔ switch is measured by the internal frequency counter and displayed on the CRT, as well as the signal voltage measured by the internal digital voltmeter is displayed.

The counter circuit is disabled when the TRIG SOURCE ㉔ selector is set for the V-MODE for two channels or more. Even when an input signal is being applied, the counter circuit is disabled if the TRIG LED ㉙ lamp is not illuminated indicating that no triggering is being accomplished.

Note that measurement may be unreliable when pulse widths are very narrow or when signal voltage is unreasonably low.

As you set the MODE SW ㊶ to the STORAGE mode, frequency measurement ceases and the measured frequency data disappears from the CRT readout as well as the voltage data measured by the DVM function disappears. As you set the MODE SW ㊶ back to the REAL mode, frequency measurement and voltage measurement resume with the settings as existed before.

4.18 Measurement of Phase Difference (except COM7201A, COM7101A and COM7061A in storage mode)

Phase difference between two signals of the same frequency can be measured. (A typical example is measurement of phase difference between input signal and output signal of an amplifier.) Measurement is done using vertical cursors and the measured value is displayed in degrees.

For this measurement, proceed as follows: Set the oscilloscope as in the case for $1/\Delta T$ measurement. Apply the reference signal (for example the input signal of the amplifier) to the CH1 input terminal ⑧ of the oscilloscope, move the displayed waveform to the center of the CRT with the CH1 POSITION ㉟ control, and adjust the time base with the SWEEP VARIABLE ⑰ control so that one cycle of the signal is displayed with a span of 5 DIV. Next, apply the signal to be compared (for example the output signal of the amplifier) to the

8942445

CH2 input terminal ⑫ and display its waveform with the same amplitude and at the same position as that of the CH1 signal waveform by adjusting the CH2 VOLTS/DIV ⑩ switch, VARIABLE ⑪ control, and POSITION ㊳ control. Move one of the cursors to the point where the CH1 input signal crosses the horizontal center line of the graticule and the other cursor to the point where the CH2 input signal crosses the horizontal center line. The phase difference between the two signals will be displayed on the CRT.

Note: When the TRIG SOURCE ㉔ selector is set for the V-MODE, the phase difference measurement is unreliable as the alternate triggering function is brought into effect. The measured value may be unreliable also when the lengths of the cables used to connect the signals to the CH1 and CH2 input terminals ⑧ ⑫ are different or when there are other causes of signal delay in the connecting circuits.

4.19 Delayed Sweep (except COM7201A, COM7101A and COM7061A in storage mode)

The oscilloscope allows you an alternate delay mode (alternate sweeps between intensity-modulated delay-preparation sweep and delayed B sweep) and delayed B sweep mode. For each of these two modes, either continuous delay sweep mode or triggered delay sweep mode (B TRG) can be selected.

1) Alternate Delay Mode (ALT)

This mode is for display of two traces--one is an intensity-modulated trace for preparation for delayed sweep and the other is a delayed B sweep.
As you change the HORIZ MODE ㊱ selector from A to ALT, part of the trace being displayed on the A sweep is intensified and at the same time an other trace which is a magnified waveform of the intensified section is displayed on the B sweep for the full span of the CRT.

The length of the intensified section of the A sweep (the length which represents the B sweep time) is adjustable with the A,B TIME/DIV ⑰ control set in the pulled out state. Both A sweep time and B sweep time are digitally displayed on the CRT.

894246

The delay time (from the starting point of writing of the A sweep to that of the intensity-modulated section) is adjustable with the READOUT control ㉝ by setting the CURSOR SW ㉛ to the DLY state. The adjustable range is approximately 1 DIV to right and left. As you turn the control to the full clockwise or counterclockwise position (to the end position), the cursor moves automatically and continuously. To stop the moving cursoe, turn the control in the reverse direction from the end position. When in this mode of operation, the delay time together with characters "DLY" is displayed on the CRT readout.

If you press the SUB CURSOR SW ㉜ when the DLY lamp is illuminated, the HO and A↕B lamps will illuminate sequentially in addition to the DLY lamp. When the HO lamp is illuminated, the READOUT control ㉝ acts as a holdoff time control. When the A↕B lamp is illuminated, the READOUT control ㉝ acts as a trace separation control to move the delayed B sweep from the A sweep to ±4 DIV or more. As you press again the SUB CURSOR SW ㉜ or press the READOUT control ㉝, the DLY lamp alone illuminates.

2) Delayed B Sweep Mode

Depending on sweep frequencies, the ALT mode may be inconvenient as the displayed waveforms may flicker or may become dim. To avoid this change the HORIZ MODE ㊱ selector from ALT to B. The delayed B sweep will be displayed on the CRT, with less flicker and higher intensity.

When in the B sweep mode, the sweep speed can be made slower by turning counterclockwise the A,B TIME/DIV ⑯ in the pulled out state. The speed, however, cannot be made slower than that of A sweep.

3) Triggered Delay (B TRIG) Mode

When in the continuous delay mode, the B sweep starts at the instant the delay time preset by the delay time control has elapsed. However, if you press the B TRIG switch of HORIZ MODE ㊱ selector when in the ALT or B mode, the triggered delay mode is brought into effect. When in this mode, the B sweep starts at the instant the signal has crossed the B trigger level after the delay period has elapsed. Even when the magnification factor is large, the displayed waveform jitters less as the start of B sweep is controlled by B triggering.

894247

Even when you turn the READOUT control ㉝ to change the delay time, the intensity-modulated section of the waveform on the A sweep does not move continuously but it moves in steps at the point where the signal crosses the B trigger level.

As you press the B TRIG switch of the HORIZ MODE ㊱, the AUTO LEVEL ㉗, the TRIG SLOPE ㉘ and the TRIG LEVEL ㉚ are automatically changed to the B trigger mode and their green lamps illuminate as well as those of the TRIG SOURCE ㉔ and the TRIG CPLG ㉕, indicating that settings of these controls can be changed.

To change them to the A trigger mode, press the A/B switch ㉖. The TRIG SOURCE ㉔ and the TRIG CPLG ㉕, however, can be set for the A or the B trigger mode irrespective of setting of the A/B switch ㉖.

When the B TRIG switch is not pressed, all lamps are orange indicating that the switches are for A trigger mode.

894248

4.20 Time Interval Measurement with Delayed Sweeps

When the HORIZ MODE ㊱ selector is set for the A sweep mode, time interval between two points on the displayed waveform can be measured by means of the cursors. Depending on the type of the displayed waveform, however, this measurement is not always accurate due to the difficulty of setting the cursors accurately at the required points. Time interval measurement with delayed sweeps is more accurate since this method allows to overlap accurately the required points of the waveforms displayed on two delayed B sweeps. For time interval measurement with delayed sweeps when the oscilloscope is operated with a single channel for example, proceed as follows:

1) Display the waveform on the CRT by adjusting the VOLTS/DIV, A TIME/DIV, and POSITION.

2) Set the HORIZ MODE ㊱ to ALT. Operate sweep in the continuous delay mode by releasing from the B TRIG mode.

3) Set the CURSOR SW ㉛ to ΔT. An A-sweep waveform with two intensity modulated sections and a B-sweep waveform with sections representing the same intensity-modulated sections but with delayed timings will appear on the CRT. (See Figure 4-8 A.)

4) With the RREADOUT control ㉝, move the two intensity-modulated sections to the positions between which the time interval is to be measure. It also is possible to move the two intensity-modulated sections in a tracking mode keeping the distance between them unaltered.

5) Pull out the A,B TIME/DIV ⑯ and set the B sweep time for more fine viewing of the measuring points on the delayed B sweep. Now you may set the HORIZ MODE ㊱ to the B sweep mode so that the B-sweep waveform alone is displayed. When in the B sweep mode, you may employ the ×10 MAG functon.

6) By adjusting the READOUT control ㉝, overlap the two measuring points on the B sweep waveform. (See Figure 4-8 B.)

7) The time interval measured as above will be displayed on the CRT readout.

894249

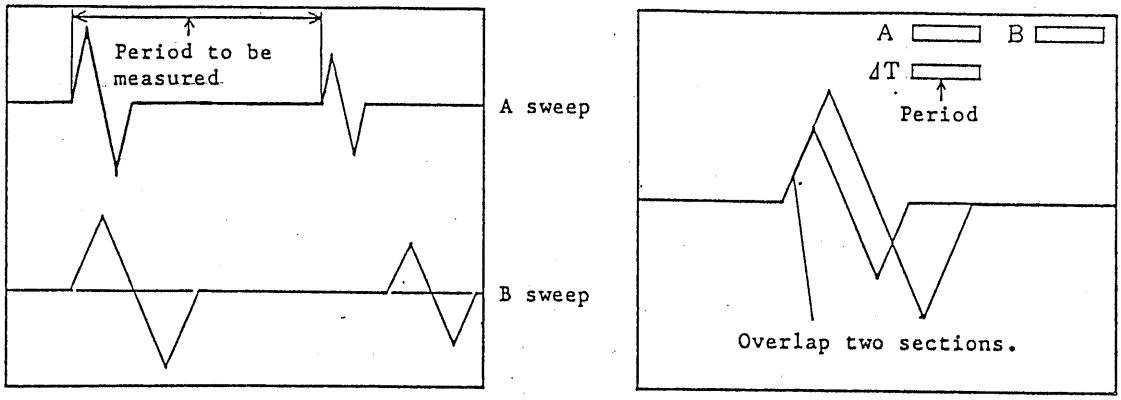

(A) ALT

(B) B Sweep Mode

Figure 4–8. Time Interval (Period) Measurement with Delayed Sweep

The above example was for the case of a single channel mode of operation. By employing a 2–channel mode of operation, it is possible to measure time difference between two points on two different signals witch are mutually related in time. When in the 2–channel mode, only one intensity–modulated section per channel is displayed on the A–sweep waveforms and also only one corresponding section per channel is displayed on the delayed sweep.

Note: When the repetitive rates of the two signals are different, pay attention when selecting the triggering signal source. In general, the one whose repetitive rate is slower is selected for the triggering source signal.

When the oscilloscope is operated with three or more traces, intensity–modulated sections are displayed as described in the following.

When the HORIZ MODE ㊱ is set for the ALT mode, the intensity–modulated sections on the A–sweep waveforms are displayed as follows:

894250

When in the 3-trace mode, one intensity-modulated section is displayed on each of the waveforms of the two leftmost channels as indicated at the VERT MODE ㊴ and two intensity-modulated sections are displayed on the waveform of the remaining channel. For example, when in a 3-trace mode with CH1, CH2 and CH3, one intensity-modulated section is displayed on each of the CH1 and CH2 waveforms and two intensity-modulated sections are displayed on the CH3 waveform. (See Figure 4-9 A.)

When in a 4-trace mode, one intensity-modulated section is displayed on each of the channel waveforms. (See Figure 4-9 B.)

When in a 5-trace mode (four input signal traces plus one ADD trace), two intensity-modulated sections are displayed on the ADD trace.

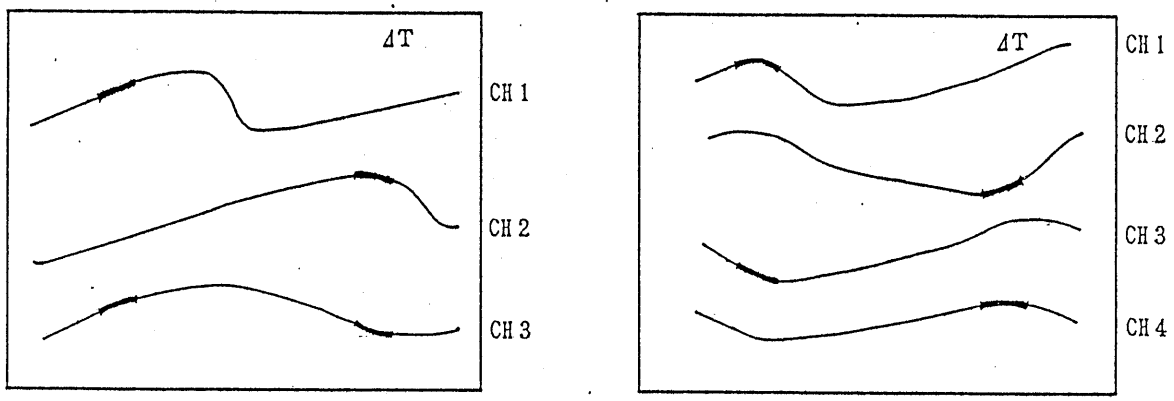

A. 3 traces B. 4 traces

Figure 4-9. Multi-trace Delayed Sweeps

The priorities of traces are in the order of CH1, CH2, CH3, CH4, and ADD. When the number of traces is even, a pair of traces is formed in the due priorities and time interval between the pair of traces is measure. When the number of traces is odd, time interval between two points only on the trace of the least priority alone is measured.

When the HORIZ MODE ㊱ is set for the CHOP mode or when the TRIG SOURCE ㉔ is set for the V-MODE and the channel indicator lamps of two or more channels are on and sweeps are running in the alternate triggering mode, two intensity-modulated sections are displayed on each of the delay preparation waveforms, thereby allowing to measure time interval between two points on the waveform of each channel.

894251

5. STORAGE MODE (COM7201A, COM7101A, COM7061A)

5.1 Storage Operation

The COM7201A, COM7101A or COM7061A can be operated in a storage mode by pressing its STORAGE MODE ㊶ switch. This section describes the functions available when the oscilloscope is in the storage mode.

1) VERT Mode

The channel(s) to be displayed on the CRT can be selected with the VERT MODE ㊴ selector when in the storage mode as well as when in the real mode. The ADD mode cannot be selected when in the storage mode, however. If the V-MODE is selected by the TRIG SOURCE switch when in the storage mode, triggering is made in the ALT TRIG mode as well as when in the real mode.

The ALT and CHOP modes of operation when the oscilloscope is set in the storage mode are as follows: When in the ALT mode, data of channels selected by the VERT MODE ㊴ selector are acquired alternately for individual channels. When in the CHOP mode, data of the selected channels (CH1 and CH2 only are selectable in this case) are acquired simultaneously. (If you attempt to select a 3- or 4-channel mode or a 2-channel mode with CH3 and CH4 when the oscilloscope is in the CHOP mode, it will be automatically changed to the ALT mode.)

2) HORIZ Mode

Either a single time base mode (A sweep) or a delayed sweep mode (ALT, B sweep) can be selected with the HORIZ MODE ㊱ selector.

When in the A sweep mode, the oscilloscope can operate with the storage function at all time base ranges of 5 s/DIV to 10 ns/DIV (20 ns/DIV for COM7101A and 50 ns/DIV for COM7061A). In this case, waveform display is in the ROLL mode if the time base is 5 s/DIV - 0.1 s/DIV or in the REPEAT mode if the time base is 1 µs/DIV (2 µs/DIV for COM7201A or COM7101A set in the CHOP mode or for COM7061A) or faster.

Delayed sweep operation in the storage mode is available when the time base is 50 ms/DIV - 10 ns/DIV (20 ns/DIV for COM7101A and 50 ns/DIV for

8942252

COM7061A). If you press the B TRIG switch when in the B sweep mode, the oscilloscope operates in the triggered delay mode. (For the delayed sweep mode of operation, see Section 5.6.) If you set the A TIME/DIV selector at 0.1 s/DIV or slower when the oscilloscope is operating in the triggered delay mode, it is automatically changed to the A sweep mode with the ROLL display.

3) REPEAT Mode

When in the repeat mode, waveform data is acquired in an equivalent time sampling method--that is, data of the waveform to displayed on the CRT is sampled being divided into a multiple number of sampling, thereby allowing to acquire data of signals whose frequencies are higher than the maximum effective storage frequency available in the realtime sampling method. Of the COM7XX1A Series Oscilloscopes, the maximum realtime sampling rate is 50M samples/sec (20M samples/sec for COM7201A and COM7101A in the CHOP mode or for COM7061A). By employing the equivalent time sampling method for the 1 µs/DIV (2 µs/DIV for COM7201A and COM7101A in the CHOP mode or for COM7061A) or faster ranges, data of repetitive signals can be acquired with sampling rates of 100M samples/sec to 10G samples/sec (5G samples/sec for COM7101A or 2G samples/sec for COM7061A).

Since a random sampling method is employed for equivalent time sampling, the pretriggering function is effective even when the oscilloscope is in the REPEAT mode, allowing you to measure data which existed before triggering as well as when in realtime sampling.

Note: When in the REPEAT mode, data of the displayed waveform is acquired by dividing into a multiple number of sampling. Therefore, data can be correctly acquired only of "repetitive" signals.

4) ROLL Mode

The ROLL mode allows you to view continuously on the CRT a slowly changing signal or a signal of very low repetitive frequency. The waveform displayed on the CRT flows from right to left, with the newest data displayed on the right hand end of the CRT.

89 4253

If you employ a regular triggering mode to display the waveform of a very flowly changing signal, quite a long period elapses before the waveform is swept for the full sweep cycle and, even though the waveform may change meantime, such change cannot be known until such change point is swept by the next sweep cycle. This rather intermittent display is inconvenient for setting of triggering conditions. If you employ the ROLL mode, a waveform flowing from right to left is continuously displayed on the CRT, irrespective of triggering allowing you to pause acquisition of further data by pressing the PAUSE ㊹ switch at the instant you have noticed on the CRT a waveform you may require.

The ROLL mode is automatically selected as you select a time base of 5 – 0.1 s/DIV. However, the oscilloscope is automatically reset from the ROLL mode if you select a multi-channel ALT mode.

Types of the ROLL mode of operation are selectable with the MODE ㉓ selector as shown in Table 5.1.

Table 5.1

MODE Selector		Type of ROLL Mode
AUTO		Displayed waveform flows continuously, irrespective of triggering. Suitable for continuous viewing of the waveform of a signal changing very slowly.
NORM	VIEW TIME OFF	
	VIEW TIME ON	Displayed waveform flows continuously until the input signal meets the triggering conditions and the triggering point which has been set by the TRIG POINT ㊽ is reached. After this point is reached, the displayed waveform remains stationary for the period preset with the VIEW TIME ㊼ and then it resumes flowing.
SINGLE		Displayed waveform flow continuously until the input signal meets the triggering conditions and the triggering point which has been set by the TRIG POINT ㊽ is reached. After this point is reached, the displayed waveform remains stationary.

89 4254

When waveform is displayed in the ROLL mode with the SINGLE sweep, sweep is reset to the READY state when a HOLDOFF period (period during which triggering is disabled and the roll operation continues) corresponding to 10 DIV's has elapsed after the RESET lamp illuminates to indicate that sweep is ready to run by triggering. When triggering is effected, the TRIG lamp ㉙ illuminates and sweep runs in the ROLL mode until the triggering point on the displayed waveform reaches the point preset by the TRIG POINT ㊽. Then the displayed waveform becomes stationary.

When waveform is displayed in the ROLL mode with the NORM sweep and with the VIEW TIME control set for a certain period, although the roll operation will resume after the view time has elapsed, the initial period corresponding to 10 DIV's is suppressed as a HOLDOFF period (during which triggering is disabled and the TRIG lamp does not illuminate even if a valid trigger signal is applied). After the HOLDOFF period has elapsed, triggering is enabled.

Thanks to the HOLDOFF period, the pretrigger function can be effectively employed to display the section which existed before triggering, as illustrated in Figure 5-1 taking an example from the case of a SINGLE sweep operation.

894255

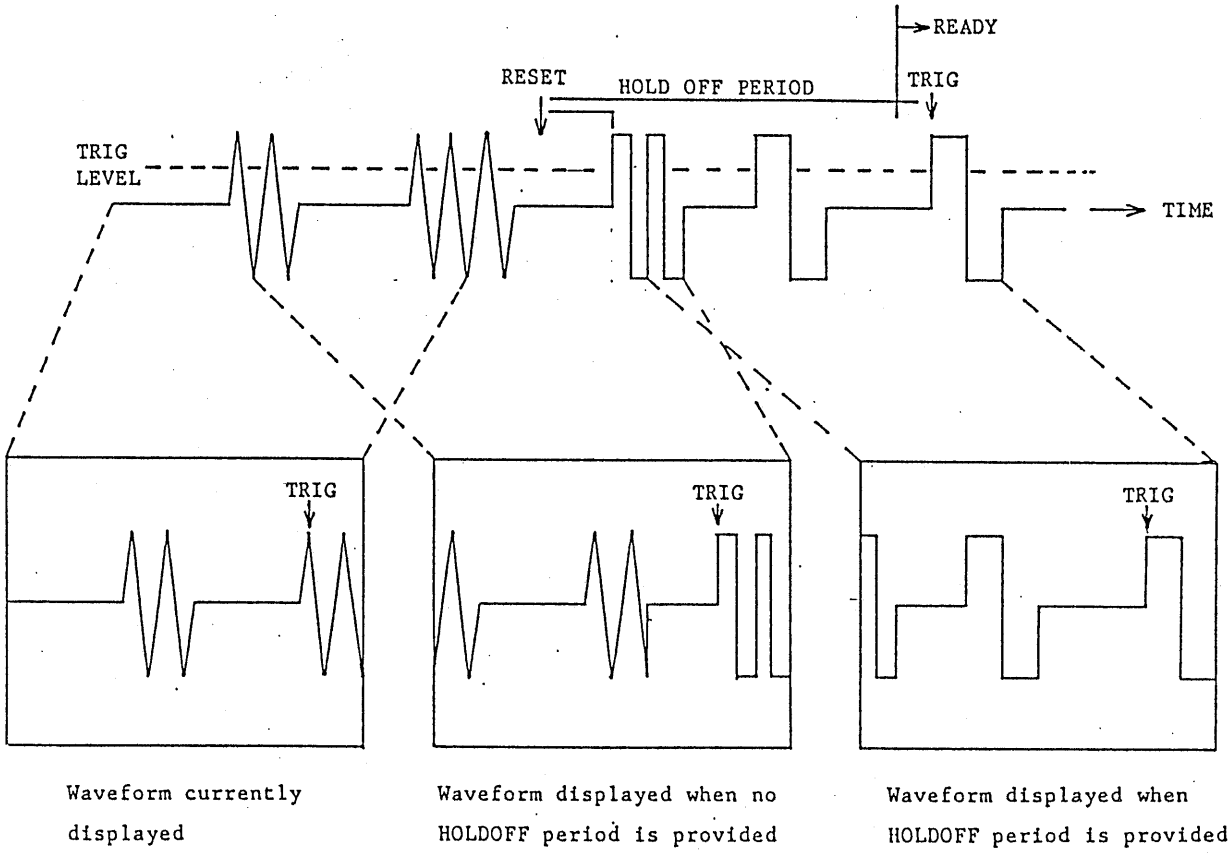

Figure 5-1. Waveforms Displayed in ROLL mode with SINGLE Sweep

When in the ROLL mode, the TRIG LAMP ㉙ may go off for a short period in spite of the fact that a valid trigger signal is being applied. Before the sweep ends in the SINGLE sweep mode in the ROLL mode, the TRIG and READY lamps may go off or may go off once and then illuminate and go off again after the sweep is over. Regardless of such lamp indications, the triggering for the ROLL operation is valid and waveform data is acquired normally.

894256

5) Time Base Magnification and Interpolation

When in the state that acquisition of data is paused by pressing the PAUSE ㊹ switch, the time base for the displayed waveform can be magnified. The center of magnification point is indicated with a MAG symbol, whose location is adjustable in 1-DIV steps with the TRIG POINT ㊽. The magnification factor is adjustable for a range of 1 – 100 times with the TIME/DIV selector.

As the waveform is magnified, the number of the sampling points of the displayed part of the waveform is reduced. In this case, data for intermediate points are provided by interpolation. Two types of interpolation, namely, PULSE interpolation and SIN interpolation are selectable with the RESPONSE ㊿.

PULSE interpolation is made by connecting each two adjoining sampling points with a straight line. An waveform substantially identical with the original sin waveform can be restored if there are more than approximately 10 sampling points per cycle. This type of interpolation is suitable for interpolation of pulsive waves. If the peak value of the original waveform is not sampled, however, the waveform restored by PULSE interpolation will not be identical with the original waveform.

SIN interpolation is suitable for interpolation of sinusoidal waves. A waveform substantially identical with the original waveform can be restored if there are 3.5 or more sampling points per cycle.

6) SINGLE SWEEP Operation When in Storage Mode

If should be noted that, unless the instrument is set in the PAUSE state, all waveform data acquired with the SINGLE SWEEP operation in the STORAGE mode will be lost and a base line will be displayed at the position corresponding to the POSITION control setting as you change the TIME/DIV SW ⑯.

If the oscilloscope is set for the SINGLE SWEEP mode in the repeat mode range, irrespective of time base setting, waveform captured at a rate of 2 μs/DIV when in a single channel mode or in an ALT mode (5 μs/DIV when in a 2-channel CHOP mode or for the COM7061A) is magnified with interpolation for display.

'90. 8.31

89425-7A

For example, when the oscilloscope is operated with a single channel at the 0.1 µs/DIV range in the SINGLE SWEEP mode, the waveform displayed on the CRT has already been magnified by a factor of 20.

$$2\ \mu s/DIV \div 0.1\ \mu s/DIV = 20$$

Thus, with COM7201A, magnification is available only up to the 20 ns/DIV range.

The SINGLE SWEEP mode is unavailable at the 20 ns/DIV range when the COM7201A or COM7101A is set for a 2-channel CHOP mode or at the 10 ns/DIV range when COM7201A is set for a single channel mode or an ALT mode.

- SINGLE SWEEP Operation When in Storage Mode

  When the VERT MODE ㊴ is set for a multi-channel ALT mode, the waveform data of the channels of the first highset priority is acquired by the first sweep cycle and that of the second highest priority is acquired by the second sweep cycle. (The priorities of the channels selected by the VERT MODE ㊴ are higher is the order of elder numbers, namely, in the order of CH1, CH2, CH3, and CH4.)

  However, if you operate the A, ALT of B of HORIZ MODE ㊱ or the TIME/DIV ⑯ before the waveform data of all of the set channels is completely acquired, all data of all channel thereto been acquired is cleared and the base lines are displayed at the positions as set by the POSITION controls of respective channels.

  If you operate the PAUSE switch before the waveform data of all of the set channels is completely acquired, although sweep magnification with the TIME/DIV ⑯ can be done, acquisition of waveform data after resetting from the PAUSE state resumes starting by the channel of the highest priority.

  Also, if you change the MODE ㉓ from NORM to SINGL, all data of all channels thereto been acquired is cleared and the base lines are displayed at the positions as set by the POSITION controls of respective channels. When in the PAUSE state, although the stored waveformed data can be held, the sweep mode cannot be changed from the NORM to the SINGL.

8942258

7) ENVELOPE Mode

When in the ENVELOPE mode, the maximum or minimum value between each two adjoining sampling points is stored as data and an waveform is displayed by connecting with a straight line between each two data value points. By this function, this mode allows you to detect even very narrow pulses (glitches) which may exist between sampling points and are unable to be detected when in the normal data acquisition mode, and also allows you to discriminate aliasing.

Aliasing may occur when the input signal frequency has become higher than one-half of the sampling frequency (Nyquist's theorem). When the input signal is a sinusoidal wave and its frequency has become close to an integer-multiplication frequency of the sampling frequency, an apparently decent sinusoidal wave may be displayed on the CRT, deceiving you into judging that its data has been correctly acquired. The ENVELOPE mode allows you to discriminate such aliasing.

Glitches are very elusive and can hardly be detected, while succesful detection and seizure of glitches are essential for analysis of digital instruments and devices. The ENVELOPE mode allows you to capture such glitches.

8) VIEW TIME Switch

When in the regular mode of operation, a new waveform is displayed immediately after the data for a full sweep cycle is acquired and this operation is continuously repeated. When you want to observe the same waveform for a long period, you may press the PAUSE ㊹ switch so that acquisition of new data is paused.

When you want to display the same waveform for a certain period and to display a new waveform after this period has elapsed and to repeat this operation, you can set the period with the VIEW TIME ㊼ switch. Each time as you press the switch, the period is changed as 1 sec → 3 sec → 10 sec→ OFF (continuous) → 1 sec.

894259

If you set the VIEW TIME switch at a certain period when the display is in the ROLL mode and the MODE ㉓ selector is set for the NORM mode, the roll operation is paused for the set period after the trigger signal is applied. After the set period has elapsed, the roll operation resumes.

The VIEW TIME switch is disabled when the oscilloscope is in the SINGLE SWEEP mode or in the REPEAT mode, or when the oscilloscope is set in the ROLL mode and the MODE ㉓ selector is set for the AUTO mode.

9) PAUSE Switch

As you press the PAUSE switch, acquisition of waveform data is paused and a message "PAUSE" is displayed on the CRT. As you press it again, acquisition of waveform data resumes. When in the PAUSE state, the time base of the displayed waveform can be magnified up to 100 times in 6 steps with the TIME/DIV switch.

When in the PAUSE state, the switches and controls except the below-mentioned ones are locked in the existing states and cannot be changed.

RESPONSE	㊿
MAG POINT	㊽
REF MEMORY	㊻
SAVE	㊺
CURSOR SW	㉛ (only when in A sweep mode)
V POSITION	㉟, ㊲, ㊳, ㊵
H POSITION	⑳
A,B TIME/DIV	⑯

Switches and controls of CRT circuit

894260

10) REFERENCE Memory and SAVE Switch

The COM7XX1A Series Oscilloscopes have a REFERENCE memory (four units) which is used in a rather offline mode to store data for later use, in addition to the DISPLAY memory which is used in a rather online mode to store data of the waveform currently displayed on the CRT. The REFERENCE memory is backed up with a battery and the data stored in it is not lost even when the POWER switch of the oscilloscope is turned off.

The REFERENCE memory may be used to compare the current acquired waveform with the reference waveform which has been stored in the REFERENCE memory. A typical example is that, on the adjusting line of a manufacturing plant, the waveform of the completely adjusted products is stored in the REFERENCE memory and the waveforms of the products being manufactured are compared with the former waveform as a reference. The waveform stored in the REFERENCE memory can be called up onto the CRT screen by pressing the REF MEMORY ㊻ switch.

To save data of the DISPLAY memory by transferring it to the REFERENCE memory, press the PAUSE ㊹ switch to pause acquisition of new data, select the required REFERENCE memory by pressing the REF MEMORY ㊻ switch, and then press the SAVE ㊺ switch.

Through a GP-IB system, data can be written onto or read from the REFERENCE memory.

The four units of REFERENCE memory are assigned depending on the number of channels selected by the VERT MODE ㊴ selector as follows:

1-channel mode: One of units 1 – 4 can be selected with the REF MEMORY ㊻ switch at a time, allowing you to use the four units in turn to save up to four waveforms. Each time as you press the REF MEMORY ㊻ switch, the unit number advances in the order of 1 → 2 → 3 → 4 → OFF → 1.

89426I

2-channel mode: A combination of units 1 and 2 or that of units 3 and 4 can be selected. Up to two waveforms per channel can be saved. To the odd number memory units, the left hand channels as indicated at the VERT MODE ㊴ switches are assigned. Each time as you press the REF MEMORY ㊻ switch, the unit number advances in the order of 1-2, → 3-4 → OFF → 1-2.

3-channel mode: The memory units of the numbers the same with those selected by the VERT MODE ㊴ switches are assigned. Each time as you press the REF MEMORY ㊻ switch, the memory units are turned on or off.

4-channel mode: All memory units are turned on at the same time, assigned to the respective channel numbers. Each time as you press the REF MEMORY ㊻ switch, the memory units are turned on or off.

Settings with the REF MEMORY ㊻ for the above modes are done mutually independently for respective modes. The off states of the REFERENCE memory units also are set mutually independently for respective modes. Therefore, when none of the REFERENCE memory units are used in all of the modes, set each of them to the off state.

Assume a case that REFERENCE memory units 3 and 4 are selected for the 2-channel mode only. In this case, as you select the 2-channel mode with the VERT MODE ㊴, the waveforms stored in REFERENCE memory units 3 and 4 is displayed on the CRT.

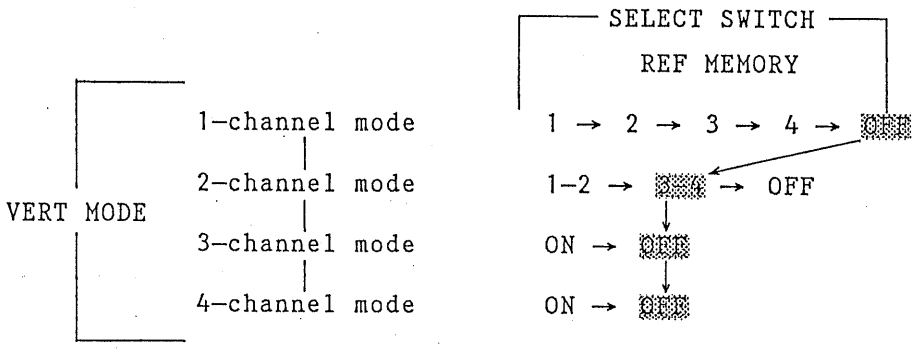

894262

5.2 Effective Storage Frequency and Frequency Bandwidth

The frequency characteristics of a digital oscilloscope depends on its effective storage frequency and frequency bandwidth. The maximum frequency of a sinusoidal wave signal which can be stored depends largely on the sampling rate and processing of the acquired waveform data. The maximum storable sinusoidal wave signal frequency is referred to as "effective storage frequency."

The sampling rate is determined by setting of the TIME/DIV ⑯ selector. The horizontal axis resolution of the COM7XX1A Series Oscilloscopes is 10-bit and a waveform is displayed with 100 data points/DIV on the horizontal axis.

When the TIME/DIV selector is set at the 1 ms/DIV range for example, the sampling period is 10 μs and the sampling rate is 100 kHz. The sampling rate in general is expressed as follows:

Sampling rate = (No. of sampling points per DIV) (TIME/DIV)

With SIN interpolation, the original waveform can be substantially restored if there are 3.5 or more sampled points per cycle. When a waveform is sampled with a sampling frequency of 100 kHz, the maximum restorable frequency is 28 kHz (100 kHz ÷ 3.5 points = 28 kHz). Thus, the effective storage frequency with SIN interpolation can be expressed as follows:

Effective storage frequency = (Sampling rate) ÷ 3.5

Thus, the original waveform can be substantially reproduced provided that the stored signal has no frequency components higher than the effective storage frequency.

'90.8.31

8942634

With PULSE interpolation, the original waveform can be substantially restored if there are 10 or more sampled points per cycle. Therefore, the effective storage frequency with PULSE interpolation can be expressed as follows:

Effective storage frequency = (Sampling rate) ÷ 10

The frequency bandwidth is not affected by the sampling rate and remains the same at all time base ranges. When in the REPEAT mode, especially at ranges 0.2 μs/DIV or higher, the effective storage frequency is calculated to be 200 MHz or higher. Actually, however, since it is limited by the frequency bandwidth and is 100 MHz (−3 dB) for COM7201A and COM7101A or 60 MHz (−3 dB) for COM7061A.

89426A

894265A

'90.8.31

TIME/DIV	Sampling Rate (samples/sec)		Effective Storage Frequency (Hz) Note1		Sweep Mode ALT/B	Sweep Mode A	STORAGE Mode	VIEW TIME	Interpolation SINE	Interpolation PULSE
5 S	20s	Realtime sampling	8				Note 2 ROLL MODE	Note 3		
2	50		20							
1	100		40							
0.5	200		80							
0.2	500		200							
0.1	1K		400							
50 ms	2K		800							
20	5K		2K							
10	10K		4K				ENVELOPE Mode			
5	20K		8K							
2	50K		20K							
1	100K		40K							
0.5	200K		80K							
0.2	500K		200K							
0.1	1M		400K							
50 μs	2M		800K							
20	5M		2M							
10	10M		4M							
5	20M		8M							
2	50M	CHOP	20M	CHOP			CHOP	CHOP		
1	100M	Equivalent time sampling	100MHz	-3dB Note 4			Magnified with interpolation when in SINGLE SWEEP mode			
0.5	200M									
0.2	500M									
0.1	1G									
50 ns	2G									
20	5G									
10	10G									

For COM7201A only

Note 1: Effective Storage Frequency (F) with SINE Interpolation

$$F = \frac{\text{Sampling rate}}{3.5} \text{ (Hz)}$$

When in single-channel mode or in ALT mode with multi-channels, or when in SINGLE SWEEP mode with 2μs/DIV or faster ranges: F = 20MHz maximum
When in CHOPE mode with two channels, or when in SINGLE SWEEP mode with 5 μs/DIV or higher ranges:
F = 8 MHz maximum

Note 2: ROLL Mode The ROLL mode is automatically released when in the single channel mode or in CHOP mode with two channels, or when in multi-channel ALT mode.

Note 3: VIEW TIME The VIEW TIME function is desabled if the MODE 23 is set for AUTO when in ROLL mode with time base of 5 - 0.1μs/DIV ranges. When in SINGLE SWEEP or REPEAT mode, the VIEW TIME function is desabled at all ranges of time base.

Note 4: Repetitive signal

Table 5.2 Storage Mode of COM7201A or COM7101A

894266A

'90.8.31

TIME/DIV	Sampling Rate (samples/sec)		Effective Storage Frequency (Hz) Note1		Sweep Mode ALT/B	Sweep Mode A	STORAGE Mode	VIEW TIME	Interpolation SINE	Interpolation PULSE	Remarks
5 S	20s		8				Note 2 ROLL MODE	Note 3			Note 1: Effective Storage Frequency (F) with SINE Interpolation $F = \frac{\text{Sampling rate}}{3.5}$ (Hz)
2	50		20								
1	100		40								
0.5	200		80								
0.2	500		200								
0.1	1K		400								
50 ms	2K	Realtime sampling	800				ENVELOPE Mode				When in SINGLE SWEEP mode with 5 μs/DIV or faster ranges: F = 8 MHz maxium
20	5K		2K								
10	10K		4K								
5	20K		8K								
2	50K		20K								Note 2: ROLL Mode The ROLL mode is automatically released when in the single channel mode or in CHOP mode with two channels, or when in multi-channel ALT mode.
1	100K		40K								
0.5	200K		80K								
0.2	500K		200K								
0.1	1M		400K								
50 μs	2M		800K								
20	5M		2M								
10	10M		4M								
5	20M		8M								Note 3: VIEW TIME The VIEW TIME function is disabled if the MODE 23 is set for AUTO when in ROLL mode with time base of 5 -0.1s/DIV ranges. When in SINGLE SWEEP or REPEAT mode, the VIEW TIME function is desabled at all ranges of time base.
2	50M	Equivalent time sampling	60MHz	-3dB Note 4			Magnified with interpolation when in SINGLE SWEEP mode				
1	100M										
0.5	200M										
0.2	500M										
0.1	1G										
50 ns	2G										Note 4: Repetitive signal

Table 5.3 Storage Mode of COM7061A

5.3 ΔT, 1/ΔT and ΔV Measurement with Cursors

When in the storage mode and the HORIZ MODE ㊱ selector is set for A sweep, ΔT, 1/ΔT and ΔV measurement with cursors can be performed as when in the real-time mode. When in the ALT or B sweep mode, however, this measurement is unavailable. Voltage ratio, time ratio and phase measurement are unavailable when in the storage mode.

5.4 DVM and Frequency Counter

The internal digital voltmeter and frequency counter are disabled when in the storage mode. To enable them, use the realtime mode (set the MODE ㊶ switch to the REAL time).

5.5 Delayed Sweep

Even when in the storage mode, magnification with B sweep is available as in the realtime mode.

As you set the HORIZ MODE ㊱ selector to ALT, an A-sweep waveform with the triggering point changed to the left hand end (0 DIV) position of the graticule (the latter is instead of an intensity-modulated delayed trace and B sweep in the case of the realtime mode) are displayed on the CRT.
At the top of the CRT screen, symbol $\overset{\text{DLY}}{\downarrow}$ which indicates the starting point of magnification is displayed instead of symbol $\overset{\text{TRIG}}{\downarrow}$ which indicates the triggering point when in the A sweep mode. Move the starting point symbol to the required point with the READOUT control ㉝. As you set the HORIZ MODE ㊱ selector to B sweep, waveform will be displayed on delayed B sweep.

The ALT and the B sweep modes are unavailable when the time base is at the 5 – 0.1 s/DIV ranges. When in the B sweep mode, triggered delay sweep with the B TRIG switch is available. When in the ALT sweep mode, the B TRIG switch is disabled.

892697

5.6 PENOUT Signal

Data stored in the reference memory and displayed on the CRT can be delivered via rear terminals of the oscilloscope for an external X-Y recorder.

For recording, connect the PEN Y OUT ㊼, PEN X OUT ㊻ and SYNC OUT ㊺ terminals of the oscilloscope to the Y INPUT, X INPUT and PEN UP/DOWN terminals of the X-Y recorder, respectively.

The X- and Y-axis output signals are 100 mV/DIV and the SYNC output signal is of a TTL level.

When in the PAUSE state, as you press the X-Y switch of the HORIZ MODE ㊱ together with the 2nd FUNCTION KEY ㊸, the X-Y recorder pen will move to the starting point of recording. In several seconds as the pen is set down onto the recording paper by the SYNC OUT signal, the X-Y recorder starts drawing the waveform data which has been stored in the reference memory.

On the CRT screen, the waveform is traced with a beam spot in the same manner as it is drawn with the pen on the X-Y recorder. Since the pen drive speed rate in the X direction is changed with respect to the amplitude in the Y direction of the waveform to be recorded, almost any model of X-Y recorder can be used (without requiring any high speed model of X-Y recorder).

When the pen has moved to the end point of waveform drawing, the pen is lifted up from the recording paper, remains in this position for several seconds, and then moves to the starting point of recording. Then the oscilloscope is reset from the PEN OUT mode to the PAUSE state.

When two or more reference memory units are indicated on the CRT readout, the above sequence is repeated to draw waveforms of all memory units and then the oscilloscope is reset from the PEN OUT mode.

To abort the above sequence halfway, press the LOCAL (2nd) switch of GP-IB ㊸ The oscilloscope will be reset from the PEN OUT mode to the PAUSE state.

894268

6. GP-IB INTERFACE

6.1 General

The oscilloscope complies with GP-IB (IEEE 488-1978), allowing itself to be remote-controlled from and to transact data with a host computer and other devices. The major functions available by this provision are as follows:

(1) Panel control: Panel keys can be remote-controlled from an external controller or other device.

(2) Step control: Panel settings of up to 100 types can be stored in internal step memory of the oscilloscope, and the panel can be instantaneously set to the required setting by giving a STEP command.

(3) Sending of data: Data of stored waveforms, DVM or cursor measurements can be sent to a controller or other device.

(4) Receiving of data: Waveform data received from the host computer can be stored in the reference memory.

(5) Direct copy by GP-IB plotter: When in the STORAGE mode, waveform data and other informations can be directly sent to a GP-IB plotter (HP-GL compatible type), without requiring any controller.

The GP-IB (General Purpose Interface Bus) allows to makeup a programmable instrumentation system by connecting various devices provided that they meet the requirements of the interface bus system.

The signals are transmitted in an 8-bit-parallel byte-serial format on a bidirectional bus. Data is transmitted in a 3-wire handshake system.

For each of the devices connected on the bus, one or more of the functions can be specified talker, listener or controller.

89269

Data can be sent from a device designated to be a talker to one or more devices designated to be listeners. The controller controls sending/ receiving of data and manages interfacing of the devices connected on the bus.

The bus is comprised of 8 data lines, 3 handshake lines and 5 bus management lines (16 lines in total) plus a ground line. In the below illustration, DI01 - DI08 are data bus; NDAC, NRFD and DAV are handshake bus; and ATN, EOI, IFC, SRQ and REN are management bus.

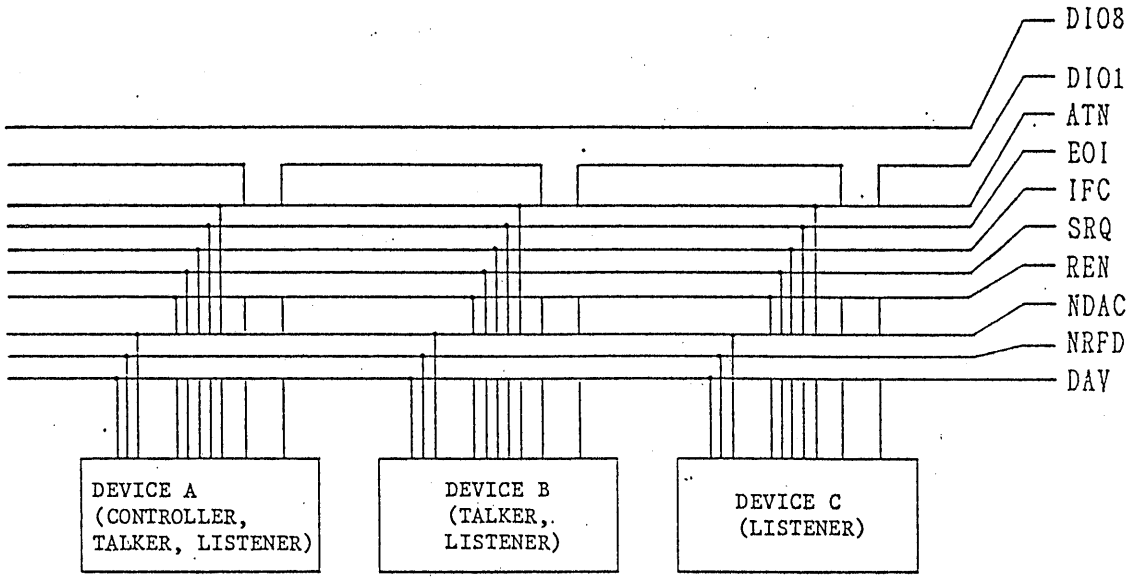

894270

6.2 GP-IB Specifications

6.2.1 Standards

ANSI/IEEE 488-1978

6.2.2 Interface Functions

Code	Function
SH1	With all SH functions
AH1	With all AH functions
T5	With basic talker function, serial poll function, talk only function, and talker release function by listener designation.
L3	With basic listener function, listen-only function and listener release function by talker designation
SR1	With service request function
RL1	With remote/local change function
PP0	Without parallel polling function
DC1	With device clear function
DT0	Without device trigger function
C0	Without controller function

89427

6.3 Descriptions for Operation

6.3.1 Remote Status and Local Status

(1) Description of Front Panel and Initial State of Remote mode

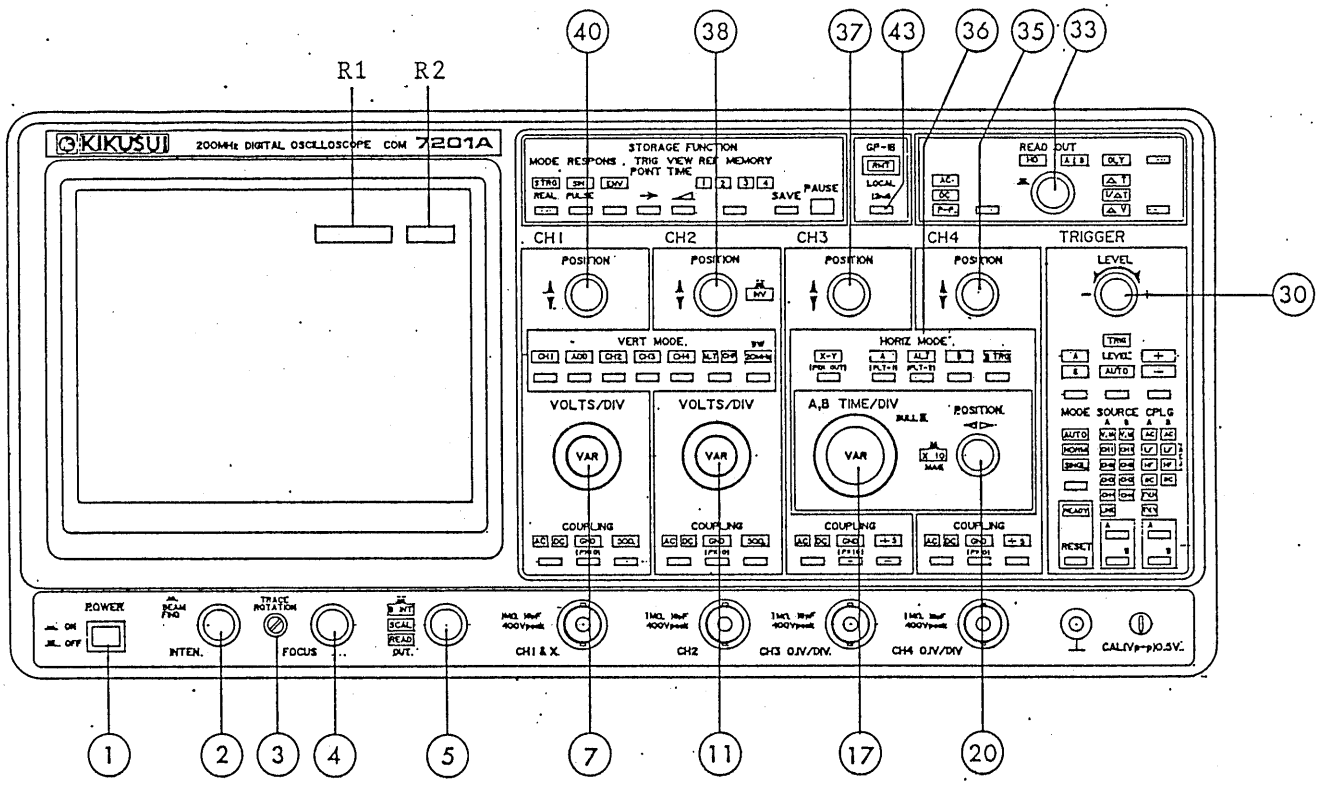

LOCAL SW ..... (43)
(2nd FUNCTION KEY)

This switch changes the oscilloscope from remote status to local status.

When the oscilloscope is set to remote status by an external controller through GP-IB, panel keys except the ones mentioned in the below table are disabled. As you press this key, the oscilloscope is changed to local status and panel keys are enabled.

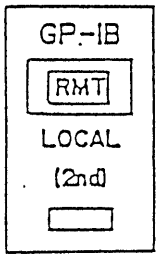

When the oscilloscope is designated to be in LLO (local lockout) status, this key is disabled and message "LOCKOUT" is displayed at the location of R1 on CRT indicated in the illustration of front panel.

The RMT lamp illuminates when in remote mode. It goes off when in local mode.

89427

Switch or Control	Function Which Differs from When in Local Status
POWER (1)	See Note 1.
INTEN (2)	Offset can be applied through GP-IB.
TRACE ROTATION (3)	
FOCUS (4)	
B INT, SCALE, READOUT (5)	SCALE and READOUT can be ON/OFF controlled through GP-IB.
VARIABLE (7) (11) VARIABLE (17)	
POSITION (20) POSITION (35) (37) (38) (40)	Offset can be applied through GP-IB. Acts as verner control.
LEVEL (30)	The same as above
READOUT CONTROL (33)	The same as above

Note 1: Turn on power of all of the devices connected on the bus, even of devices which are not currently used.

When the oscilloscope is changed from the local status to the remote status, the items mentioned in the following table are changed as mentioned there. Other items remains in the local status.

Item	Initial State
INTEN POSITIONS A/B LEVEL A/B SEPARATION	0 (center) 0 (center) 0 (center) 0 (center)
CURSOR	0 (center) after executing MOVE command
EOI SRQ	ON ON
WAVE CODE START END	BINARY 0 7

80273

HORIZ MODE ..... (36)

(PLT 1), (PLT 2)

As you press this switch together with the 2nd FUNCTION KEY (43) when in the STORAGE mode, a message "PLOT OUT" is displayed at R2 shown in the illustration and waveform data is sent to the GP-IB plotter. This function is available only when the GP-IB switches of the oscilloscope are set for the TALK ONLY mode and those of the GP-IB plotter for the LISTEN ONLY mode.

PLT 1

2nd + "A": Data is delivered with scale double of that of CRT graticule.

PLT 2

2nd + "ALT": Data is delivered with scale identical with that of CRT graticule.

89 42 74

(2) Description of Rear Panel and Setting of Delimiters

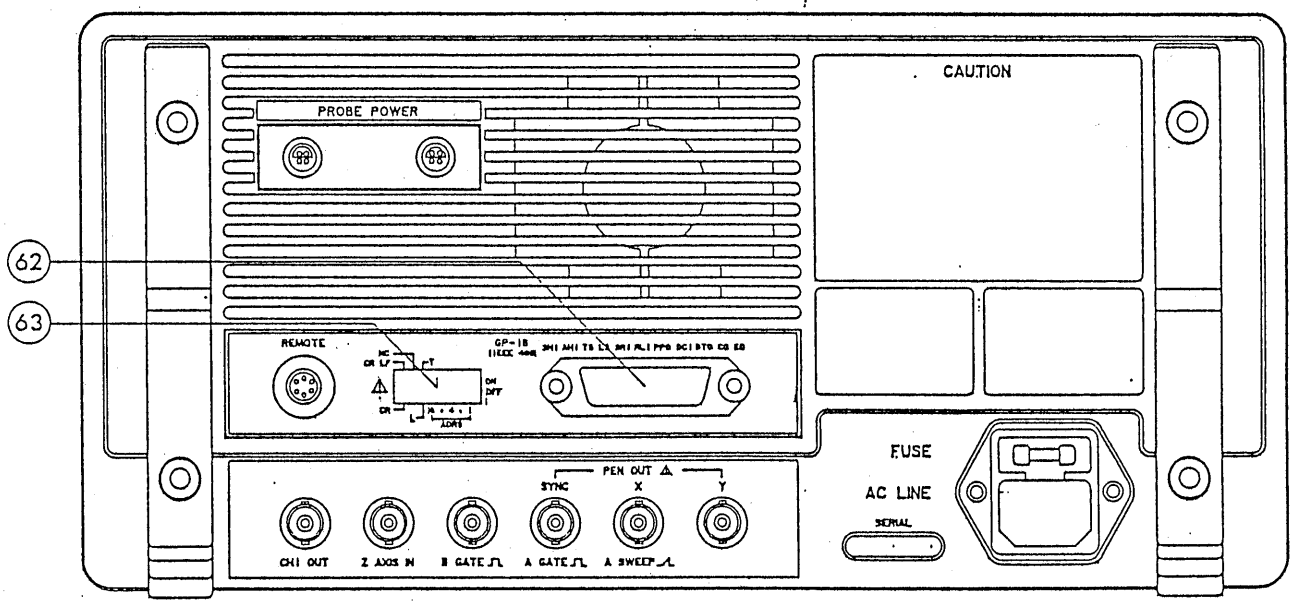

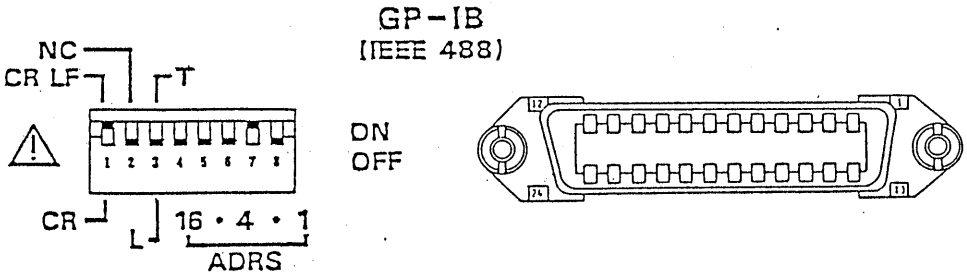

GP-IB Connector ..... (62) 24-pin connector which accepts GP-IB cable.

Note: When stacking up units by using piggy-back connectors, up to three units are allowable.

GP-IB Switches ..... (63) DIP switches to set oscilloscope address (MLA, MTA) and delimiters

8942765

Address Setting

For address setting, use the five or six rightmost ones of the DIP switches.

o Normal Address (0 - 30)

The ADRS section of the DIP switches is marked "16.4.1", which stands for "16 8 4 2 1". The set address number is the sum of the switches set in the ON position. When all switches are set in the OFF position, the address number is 0. To set the address number at 19 for example, set the switches as follows: Since 19 = 16 + 2 + 1, set the "16", "." (which stands for 2) and "1" switches in the ON position.

Note: When the oscilloscope is shipped from the factory, the address number is set at 2.

o TALK ONLY

Set all switches of the ADRS section in the ON position and the T/L switch (switch 3) also in the ON position.

Note: When set in this state the oscilloscope is fixed as a TALKER and it cannot be remote-controlled.
The address switches of the objective GP-IB plotter connected to the bus line must be set in the LISTEN ONLY mode.

894276

o LISTEN ONLY

Set all switches of the address section in the ON position but the T/L switch (switch 3) in the OFF position.

Note: When set in this state the instrument is fixed as a LISTENER and it cannot send out the measured data or any other information.

o Setting of Delimiters

Five types of delimiters as follows can be used.

(1) EOI
(2) CR
(3) CR + EOI
(4) CR + LF
(5) CR + LF + EOI

CR: Carriage Return
LF: Line Feed
EOI: End or Identify

Delimiters can be set with GP-IB switches (63) and EOI command. When in transfer of binary data, however, EOI only can be used irrespective of switch setting.

Delimiter	GP-IB Switches (63)	EOI Command
EOI	Either setting	ONLY
CR	CR	OFF
CR + EOI	CR	ON
CR + LF	CR + LF	OFF
CR + LF + EOI	CR + LF	ON

Even when delimiter is other than "EOI ONLY", handshake terminates if EOI is given.

Notes: 1. When the oscilloscope is shipped from the factory, the delimiter switches are set for CR LF.

89427

2. When in transfer of binary data blocks, EOI alone is effective irrespective of delimiter switch setting.

   Note: Refer to the notes for GP-IB switches.

3. The set states of GP-IB switches are read only once when turning on the oscilloscope. When power is continuously on, the address and delimiters do not change in response to change of switch settings. To change them, turn off power, change the switch settings, and then turn on the oscilloscope.

4. Other requirements comply with GP-IB (IEEE 488-1978) Standard.

(3) Device Functions

o Transfer of Commands and Data

① Remote control of panel setting
② Transfer of setting data
③ Transfer of measured data
④ Transfer of waveform data

① Remote Control of Panel Setting

Front panel setting of the oscilloscope can be remote-controlled from an external controller through the GP-IB bus.

For example, to set the input coupling mode of CH1 to AC, send a character train of "CH1 COU AC" to the oscilloscope. The oscilloscope will decode the character train and will set the CH1 input coupling circuit to the AC mode.

By using "STEP" commands, setting is not made one by one but can be accomplished instantaneously.

894278

(2) Transfer of Setting Data

Data on setting of panel items of the oscilloscope can be sent to an external device, such as a host computer.

For example, when you want to read and send the set status of CH1, send a character train of "CH1?" to the oscilloscope. The oscilloscope will decode the character train and write the set status data of CH1 on the send buffer. Now designate the oscilloscope to be a talker, and a message representing the set status of CH1 will be sent. An example of message is shown below.

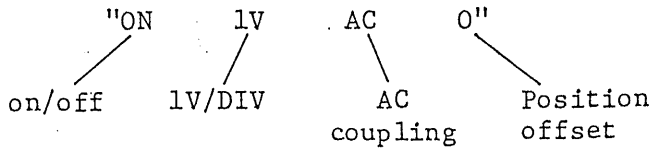

(3) Transfer of Measured Data

Data measured with cursors, DVM and frequency counter are displayed on the CRT readout of the oscilloscope. This data can be transmitted to an external controller or other device.

For example, when you want to read and send the time interval measured with the cursors, send a character train of "CUR?" to the oscilloscope (provided that the cursors are in the ΔT mode). The oscilloscope will decode the character train and write the cursor mode and measured data on the send buffer. Now designate the oscilloscope to be a talker, and the data will be read and sent as follows:

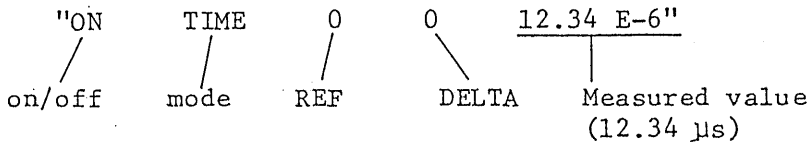

When you want to read and send the measured value alone, send a character train of "CUR DAT" to the oscilloscope. It will read and send the measured value alone as "12.34 E-6".

89279

④ Transfer of Waveform Data

The oscilloscope has four memory units, with memory capacity of 1024 points per unit. Data stored in these units can be transferred in ASCII or binary coded format to a computer for storing in a larger capacity, to a printer or a plotter for hardcopies, or to other devices for other purposes.

o Device Clear Function

As the oscilloscope receive a DEVICE CLEAR command, it clears its status bytes and send/receive buffers.

6.3.2 Command and Data Formats

To remote-control the oscilloscope with GP-IB, send data from the controller (host computer) in the following format:

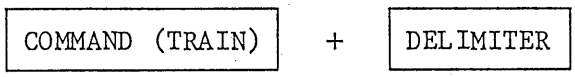

(1) Command Format

Each command should be a train of characters complying with ASCII Codes, and should be comprised of a header and arguments, and separators between them in a format as shown in the following example.

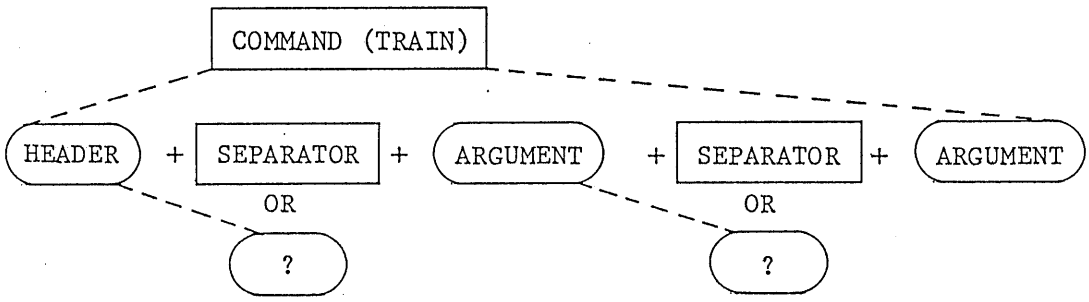

o Header

The header identifies the type of command, such as "CHANNEL 1" or "DVM".

080280

o Separators

A blank space code for one or more characters and semicolon ";" can be used as separators. A space code is used between header and argument or between two arguments.

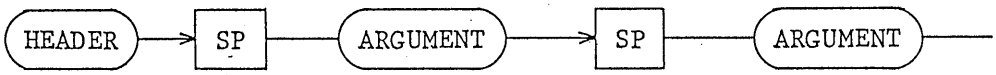

A semicolon can be used between two commands. When so specified, however, semicolons are effective only within the trains which follow the same header.

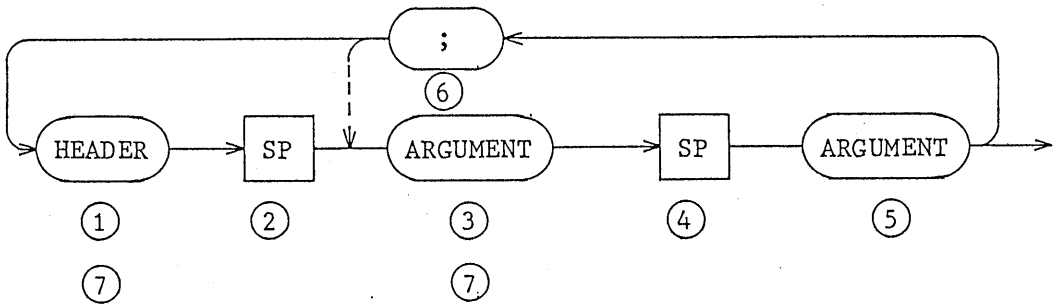

o Arguments

Two types of arguments can be used. One is a train of characters, such as "ON" or "AC". The other is a numerical data, such as "15" or "-20".

o Parameter "?"

This parameter is placed at the end of a command requesting to read and send. Note that "?" cannot be followed by another command or a separator ";".

(2) Waveform Data Formats and Blocks

Waveform data formats are selectable between ASCII codes and binary codes with "WAVE CODE" command as follows:

894281

o ASCII Codes

" NUMERAL , NUMERAL , NUMERAL , ···· , NUMERAL " + DELIMITER

The range for the numerals is "000" to "255". All types of delimiters are effective.

o Binary Codes

" NUMERAL NUMERAL NUMERAL NUMERAL····NUMERAL NUMERAL EOI "

The numerals are with eight bits for "0" to "11111111". For delimiters, EOI alone is effective.

Waveform data per channel (per memory unit) is stored on a 1k-word (1024 points) memory unit. Since memory unit is divided into eight blocks as illustrated below, part of the stored waveform data can be read and send by specifying block numbers.

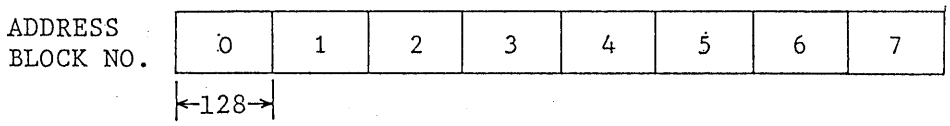

For example, to read and send data of from point 128 to point 511, specify start block 1 and end block 3 with the "WAVE" command.

(3) Delimiters

One of CR+LF(+EOI), CR(+EOI) and EOI can be used as delimiter. See page 6-9 "Setting of Delimiters".

(4) Abbreviations of Commands

As a general rule, commands including headers and arguments can be abbreviated into a string of three characters.

Examples: "ATRIGGER" → "ATR"
"COUPLING" → "COU"
"CHANNEL1" → "CH1"

Abbreviations of headers and arguments are shown being enclosed in parentheses in the table of commands.

8942882

(5) SRQ and Status Byte

The oscilloscope is allowed to originate a service request (SRQ) to send information on its internal events to the external controller, and displayed "SRQ" on the readout R2 of CRT. (See page 92 front panel). Events are identified by respective bits of a status byte, allowing the controller to identify the types of events.

When the oscilloscope is set to the local status, the SRQ becomes the ON state. To inhibit sending of service requests from the oscilloscope, give it a "SRQ OFF" command.

The relationships between the events and the corresponding bits of status byte are as shown below.

'90. 8.31

89428834

Status byte

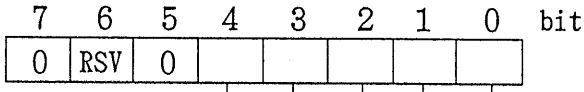

Error 1
Set: Command with syntactical error
Clear: Device clear or local

Error 2
Set: command which is syntactially correct but is disabled to be executed under the current mode
Clear: Device clear or local

Counter measurement
Set: Measurement complete with "COUNTER ON"
Clear: Measurement done with "COUNTER?" or others; or local

DVM measurement
Set: Measurement complete with "DVM ON"
Clear: Measurement done with "DVM ON?" or others; or local

Data acquired on single sweep in strage mode

Set: Waveform data acqired by effecting a trigger when in the READY state for single sweep in the storage mode
Clear: Device clear or local

When power of the oscilloscope is turned on, "0" is set for all bits of the status byte.

'90. 8. 31

9047 43

6.3.3 Data Send/Receive Sequence

The basic sequence of oscilloscope control by GP-IB is as described in this section.

(1) To Set Oscilloscope

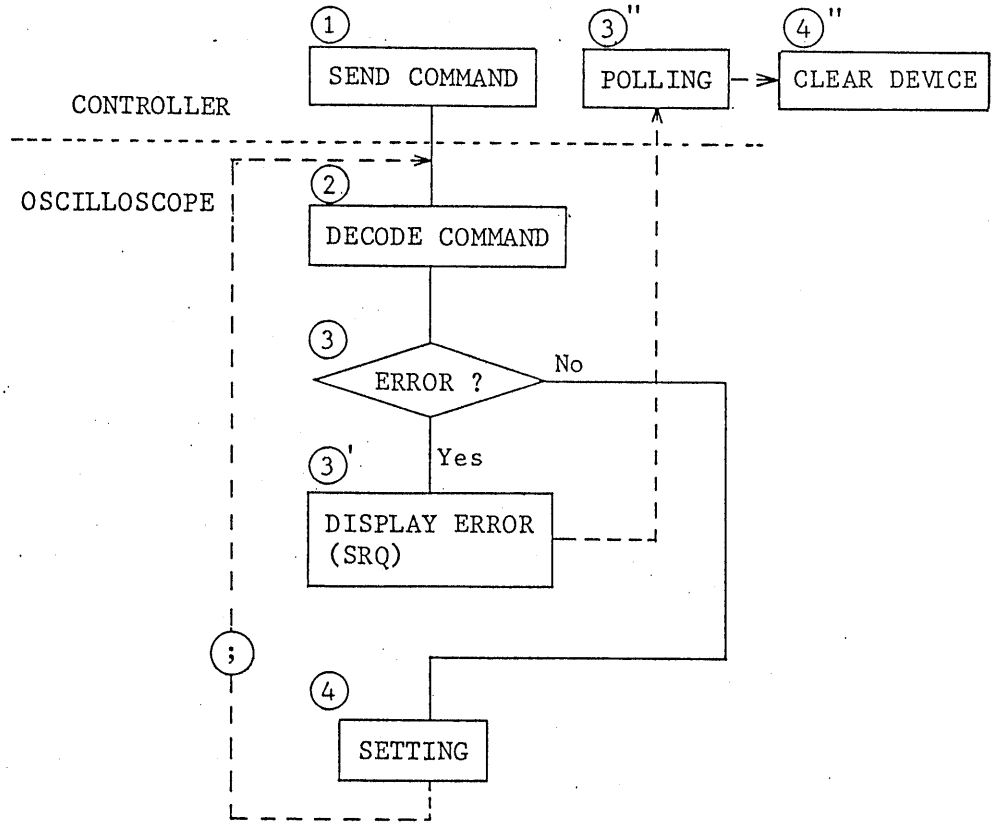

(1) Designate oscilloscope for listener and send command.

(2) Decode command stored in receive buffer of oscilloscope.

(3) Check for errors.

(3)' Display errors, if any. (If SRQ function is enabled, send SRQ to controller.)

(3)" In response to SRQ, perform serial polling and read status byte and then clear device.

(4) Perform setting. If two or more commands are connected by ";", repeat (2), (3) and (4).

90.8.31

89428A

(2) To Read Data

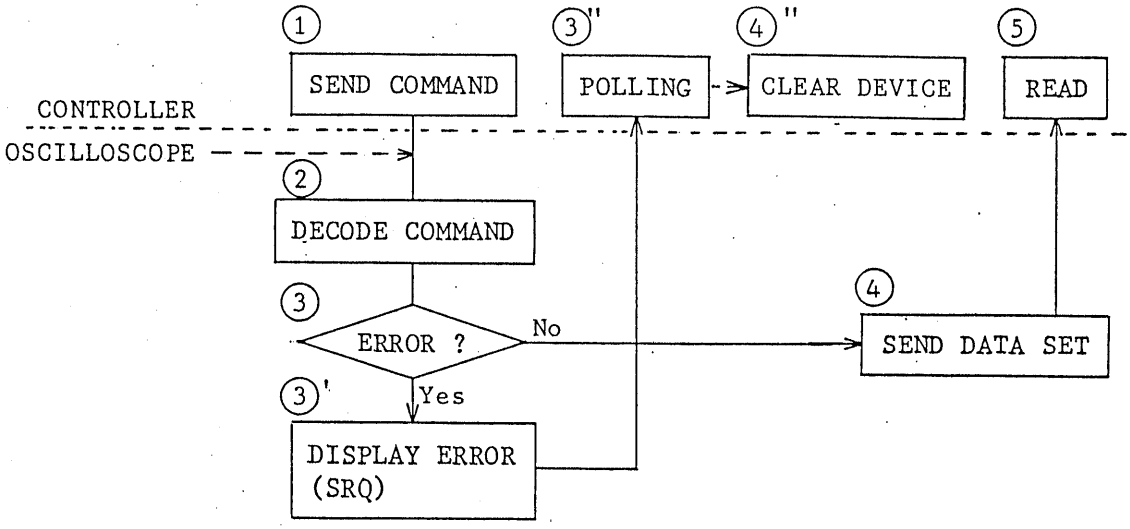

(1) Designate oscilloscope for listner and send command.

(2) Decode command stored in receive buffer of oscilloscope.

(3) Check for errors and, if any, take necessary steps as in the case of (1).

(4) Set specified data in send buffer.

(5) Designate oscilloscope for talker to send data.

'90.8.31

894285A

6.4 Table of Commands

o Items Indicated in Table

The table indicates individual commands which are used to control the oscilloscope. Each command is indicated together with its function and data to be sent when the oscilloscope is designated for a talker. Examples of writing programs referring to the table are given in this section.

(1) To Set the Oscilloscope

o To set CH1 input coupling to AC

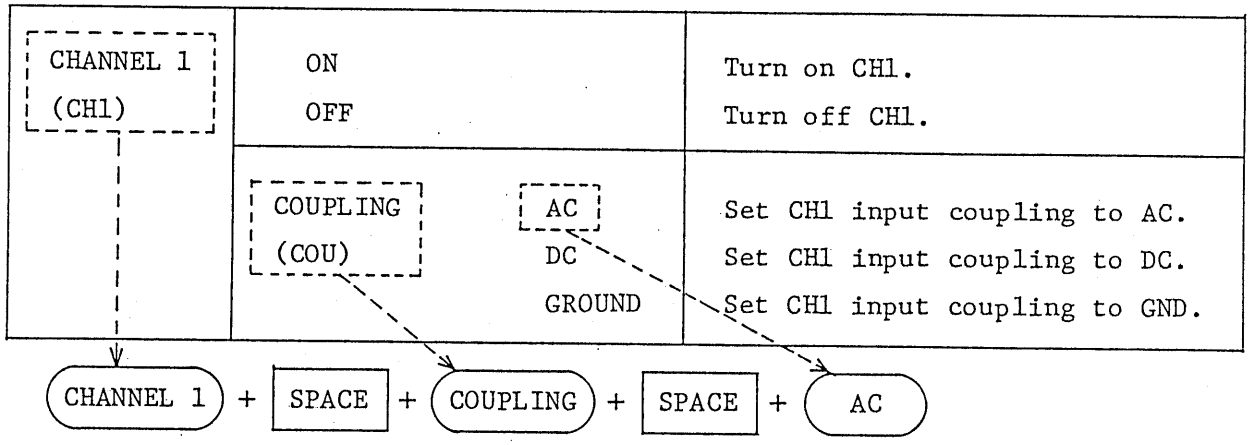

Command is as
"CHANNEL1 COUPLING AC"
or abbreviated as "CH1 COU AC".

o To Turn on CH2 and then invert it

Commands are written with abbreviations as follows:

"CH2 ON"
"CH2 INV ON"

The above two commands can be connected using a semicolon as follows:

"CH2 ON ; INV ON"

'90. 8. 31
89428864

In this particular case, since there is internal specification of CH2, commands which can be connected are limited. When there are no specifications, other headers also can be connected.

o To initialize CH2 and then turn it off

"INI ; CH2 OFF"

(2) To read set range or measured data of oscilloscope

o To read CH1 input coupling setting

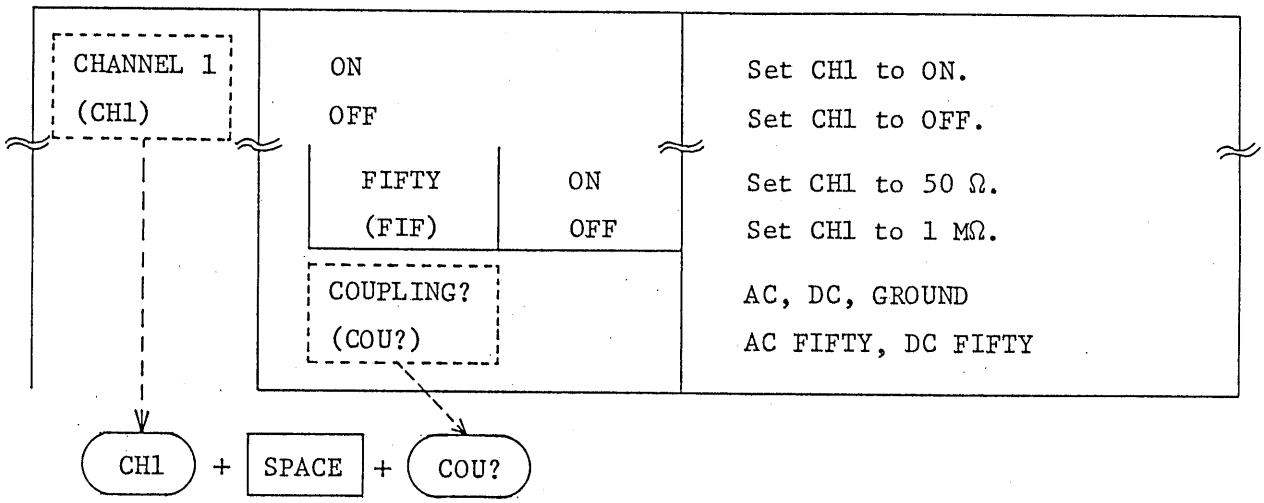

"CH1 COU?"

With this command, data on the current setting of CH1 input coupling of oscilloscope is written in the send buffer of oscilloscope. To read and send this data, designate the oscilloscope for a talker.

For IBM PC: CALL IBRD(KIK%,A$) (Substitute character variable A$ with data.)

For HP-9826: ENTER @Com ; A$ (Substitute character variable A$ with data.)

Programs for the above can be written as follows:

IBM PC

```
10 W$="CH1 COU?": CALL IBWRT(KIK%,W$)
20 A$=SPACE$(32):CALL IBRD(KIK%,A$)
```


'90.8.31

89428A

```
HP-9826
  10 OUTPUT @Com; "CH1 COU?"
  20 ENTER @Com; A$
```

Thus, setting data such as "AC" or "DC" can be read.

o To read setting of CH1

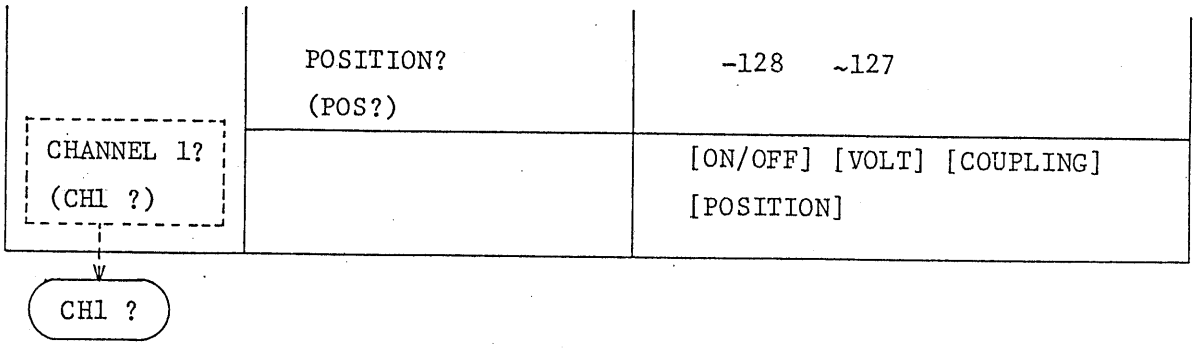

Example of set data as it is read:

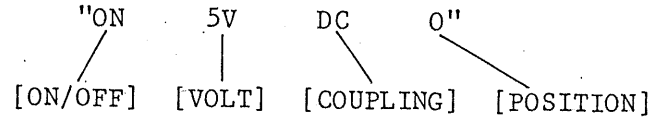

A blank space is placed between two set values.

'90.8.31

8942888A

6.4.1 System Commands

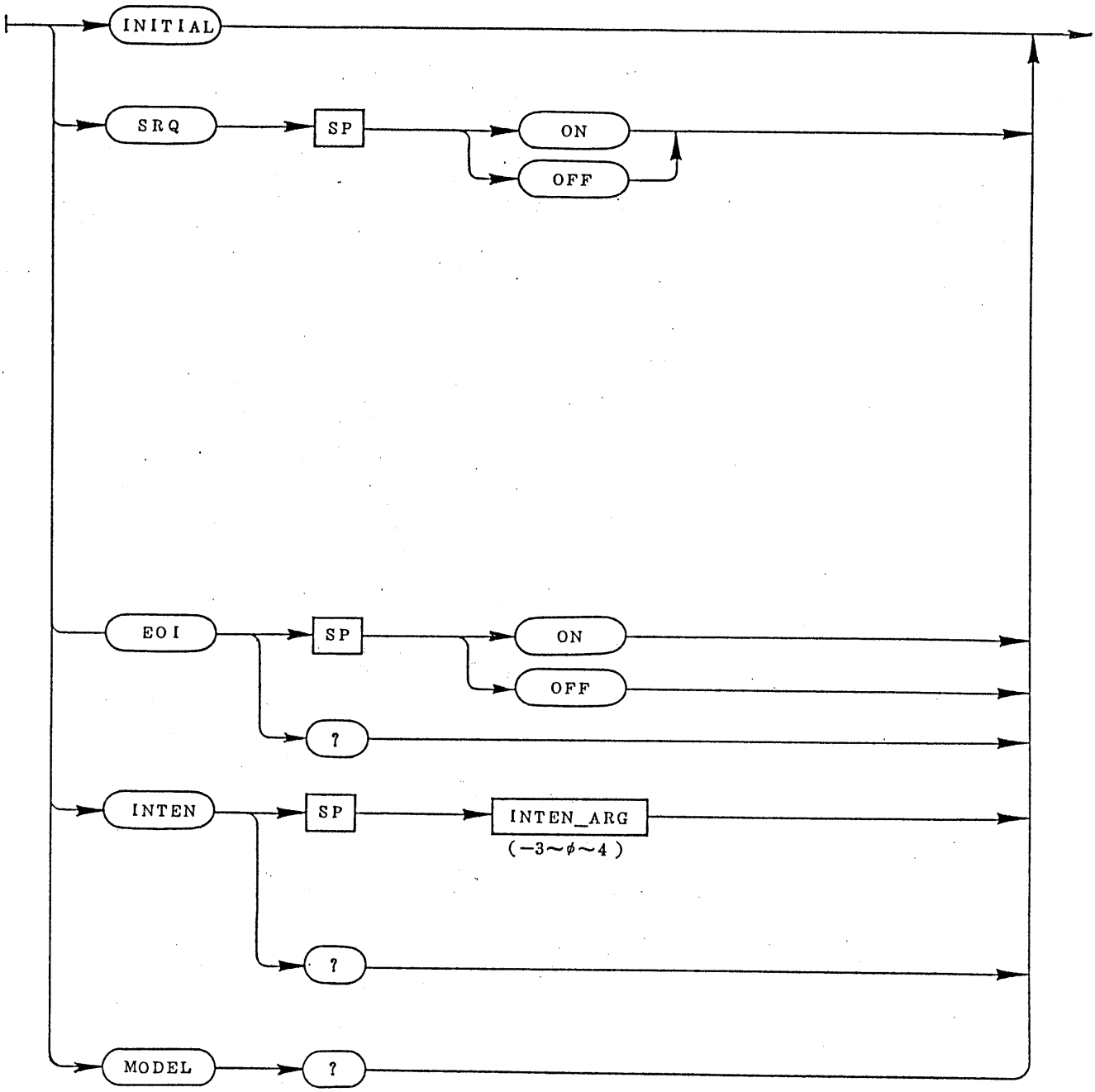

'90.8.31
89428894

Header	Argument		Action
INITIAL (INI)			Set to status identical with that of "initial mode set" (page 4-29).
SRQ	ON OFF		Enable SRQ. Disable SQR.
	MEASURE	ON OFF	Enable or disable SRQ when Measurement with Counter or DVM is over.
SRQ?			[ON/OFF] [MEASURE ON/OFF]
EOI	ONLY (ONL) ON OFF		Limit delimiter to EOI only when send. Enable EOI when send. Disable EIO when send.
EOI?			ON, OFF, ONLY
INTEN (INT) INTEN? (INT?)	-3 ～4		Offset INTEN ②. -3(dark) ↔ 4(bright) -3, -2, ---- 3, 4
MODEL?			Model name COM7201A, COM7101A, COM7061A COM7200A, COM7100A, COM7060A

6.4.2 Commands for Vertical Axis

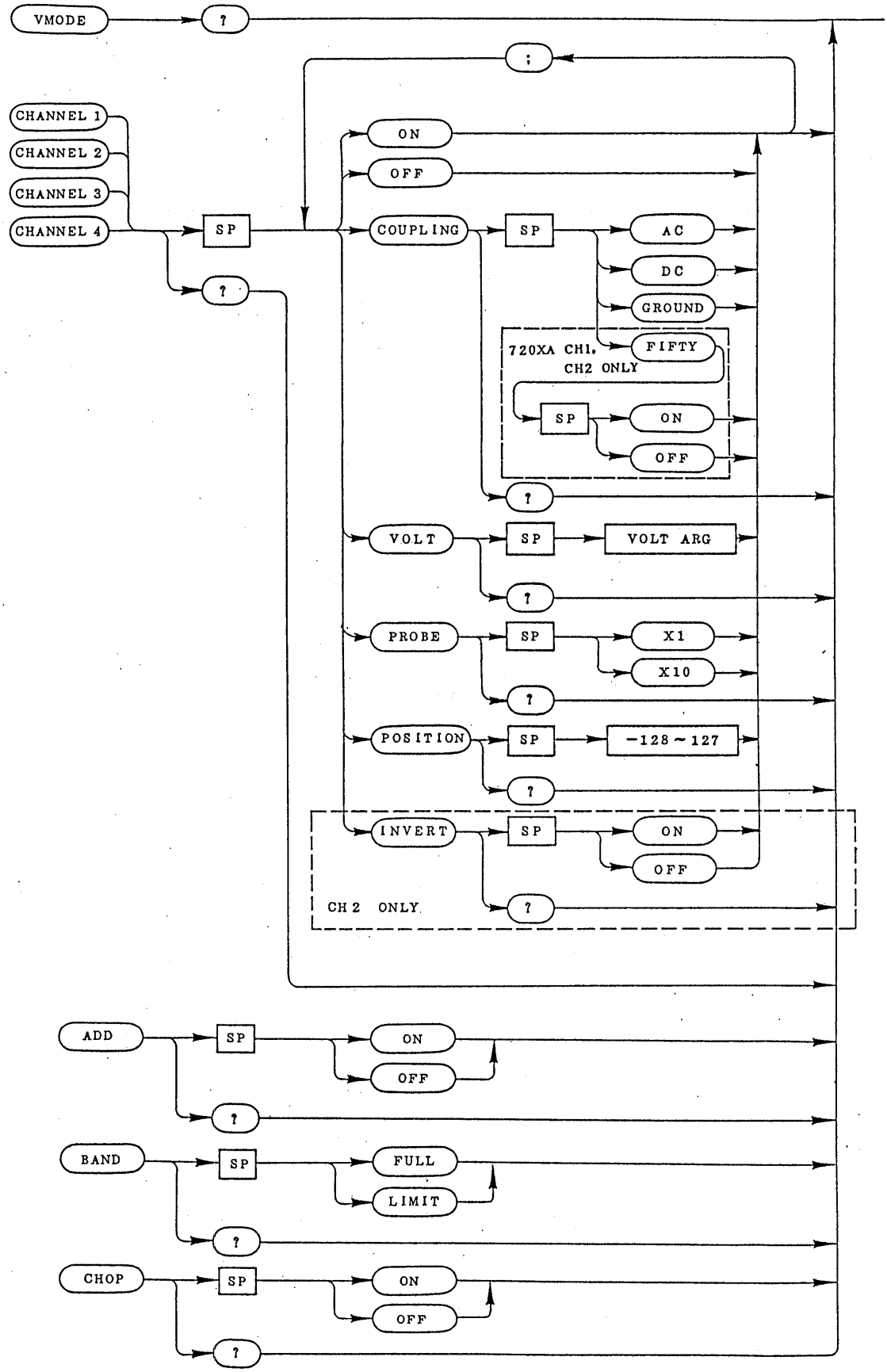

90.8.31
89429IA

Header	Argument		Action
VMODE? (VMO?)			VERT MODE such as CH1, CH2, ALT
CHANNEL 1 (CH1)	ON		Turn on CH1.
	OFF		Turn off CH1.
	COUPLING (COU)	AC	Set CH1 input coupling to AC.
		DC	Set CH1 input coupling to DC.
		GROUND (GRO)	Set CH1 input coupling to GND.
	FIFTY (FIF)	ON	Set CH1 input coupling to 50Ω.
		OFF	Set CH1 input coupling to 1 MΩ. See Note 1.
	COUPLING? (COU?)		AC, DC, GROUND AC FIFTY, DC FIFTY
	VOLT (VOL)	5V	Set CH1 sensitivity to 5 V/DIV
		2V	Set CH1 sensitivity to 2 V/DIV
		1V	Set CH1 sensitivity to 1 V/DIV
		.5V	Set CH1 sensitivity to 0.5V/DIV
		.2V	Set CH1 sensitivity to 0.2V/DIV
		.1V	Set CH1 sensitivity to 0.1V/DIV
		50MV	Set CH1 sensitivity to 50mV/DIV
		20MV	Set CH1 sensitivity to 20mV/DIV
		10MV	Set CH1 sensitivity to 10mV/DIV
		5MV	Set CH1 sensitivity to 5 mV/DIV
		2MV	Set CH1 sensitivity to 2 mV/DIV
		1MV	Set CH1 sensitivity to 1 mV/DIV
	VOLT? (VOL?)		5V ~ 1mV
	PROBE (PRO)	X1	Set CH1 probe and input sensitivity display to 1:1.
		X10	Set CH1 probe and input sensitivity display to 10:1.
	PROBE? (PRO?)		×1, ×10
	POSITION (POS)	−128 ~ 127	Set CH1 POSITION. See Note 2.
	POSITION? (POS?)		−128 ~ 0 ~ 127
CHANNEL 1 ? (CH1 ?)			[ON/OFF] [VOLT (×10) (UNCAL)] [COUPLING] [POSITION]

Note 1: FIFTY is effective for COM7201A and COM7200A only.

Note 2: Be sure to set POSITION when in remote mode of operation.

Header	Argument		Action
CHANNEL2 (CH2)	ON OFF COUPLING VOLT PROBE POSITION		The same as that for CH1
	INVERT (INV)	ON OFF	Enable CH2 INV. Disable CH2 INV.
	INVERT? (INV?)		ON, OFF
CHANNEL2 ? (CH2 ?)			The same as that for CH1
CHANNEL3 (CH3)	ON OFF		Turn on CH3. Turn off CH3.
	COUPLING (COU)	AC DC GROUND (GRO)	Set input coupling to AC. Set input coupling to DC. Set input coupling to GND.
	COUPLING? (COU?)		AC, DC, GROUND
	VOLT (VOL)	0 or .5V 1 or .1V	Set CH3 sensitivity to 0.5V/DIV. Set CH3 sensitivity to 0.1V/DIV.
	VOLT? (VOL?)		0.5V, 0.1V
	PROBE (PRO)	X1 X10	Set CH1 probe and input sensitivity display to 1:1. Set CH1 probe and input sensitivity display to 10:1.
	PROBE? (PRO?)		× 1, × 10
	POSITION (POS)	− 128 ~ 127	Set CH3 POSITION. See Note 1.
	POSITION? (POS?)		− 128 ~ 127
CHANNEL3 ? (CH3 ?)			[ON/OFF] [VOLT] [COUPLING] [POSITION]

Note 1: Be sure to set POSITION when in remote mode of operation.

90.8.31

89A2933A

Header	Argument	Action
CHANNEL 4 (CH 4) CHANNEL 4 ? (CH 4 ?)	ON OFF COUPLING VOLT PROBE POSITION 	The same as that for CH3
ADD ADD?	ON OFF 	Enable ADD. Disable ADD. ON, OFF
BAND (BAN) BAND? (BAN?)	FULL (FUL) LIMIT (LIM) 	Without bandwidth limit. (BWL OFF) With bandwidth limit. (BLW ON) FULL, LIMIT
CHOP (CHO) CHOP? (CHO?)	ON OFF 	Enable CHOP for multi-traces. Disable CHOP for multi-traces. (=ALT) ON, OFF

6.4.3 Commands for Time Base (Horizontal Axis)

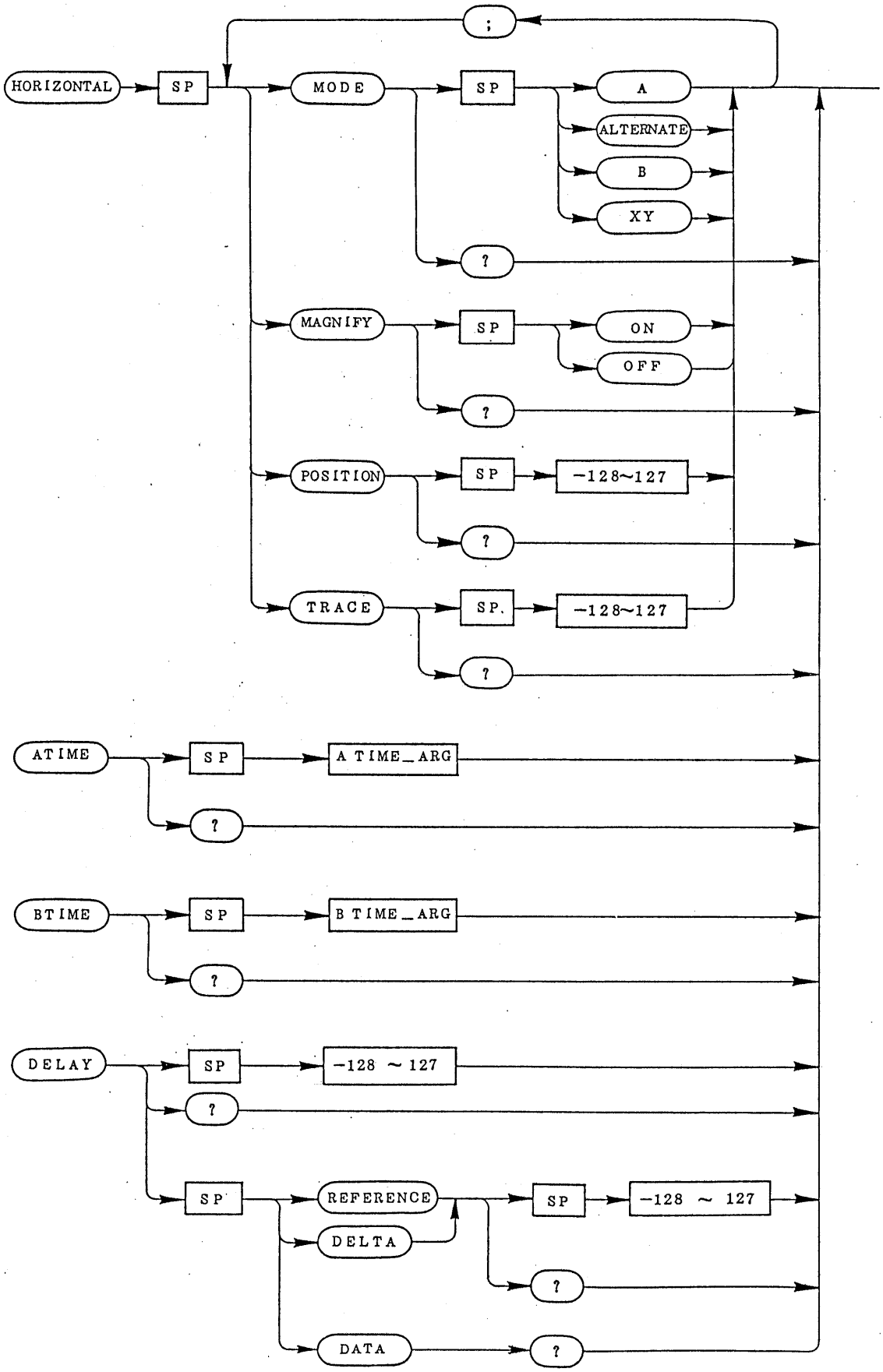

'90.8.31

89429SA

Header	Argument		Action
HORIZONTAL (HOR)	MODE (MOD)	A ALTERNATE (ALT) B XY	Set sweep mode to A. Set sweep mode to ALT. Set sweep mode to B. Set to X-Y mode.
	MODE? (MOD?)		A , ALT, B , XY
	MAGNIFY (MAG)	ON OFF	Enable x10 MAG for horiz axis. Disable x10 MAG for horiz axis.
	MAGNIFY? (MAG?)		ON, OFF
	POSITION (POS)	− 128 ~ 127	Set HORIZ POSITION.
	POSITION? (POS?)		− 128 to 127
	TRACE (TRA)	− 128 ~ 127	Set TRACE SEPARATION.
	TRACE? (TRA?)		− 128 to 127
HORIZONTAL? (HOR?)			[MODE] [MAG] [POS] [TRACE]
HOLDOFF (HOL)	− 127~ 128		Set HOLDOFF.
HOLDOFF? (HOL?)			− 127 to 128.
ATIME (ATI)	Table 6 − 1		STORAGE 5s ~ 50ns, 20ns, 10ns REAL 0.5s ~ 50ns, 20ns, 10ns
ATIME? (ATI?)			(UNCAL)
BTIME (BTI)	Table 6 − 1		See Note 1.
BTIME? (BTI?)			0.5s ~ 50ns, 20ns, 10ns

Note 1: B TIME/DIV cannot be set at a range slower than that of A TIME/DIV.

'90.8.31

89 4296A

Table 6-1

Range		Argument	7060A	7100A	7200A	7061A	7101A	7201A
Note	5 s	5 S				↑	↑	↑
	2 s	2 S						
	1 s	1 S						
.5s		.5S	↑	↑	↑			
.2s		.2S						
.1s		.1S						
50ms		50MS						
20ms		20MS						
10ms		10MS						
5ms		5MS						
2ms		2MS						
1ms		1MS						
.5ms		.5MS						
.2ms		.2MS						
.1ms		.1MS						
50μs		50US						
20μs		20US						
10μs		10US						
5μs		5US						
2μs		2US						
1μs		1US						
.5μs		.5US						
.2μs		.2US						
.1μs		.1US						
50ns		50NS	↓			↓		
20ns		20NS		↓			↓	
10ns		10NS			↓			↓

Note: For storage mode only.

'90.8.31

89429 7A

Header	Argument		Action
DELAY (DEL)	MODE (MOD)	DELAY (DEL)	Set to DELAY mode.
		TIME (TIM)	Set to double delay ΔT mode.
		PERTIME (PER)	Set to double delay 1/ΔT mode.
	MODE? (MOD?)		DELAY, TIME, PERTIME
	− 128 ～ 127		Set DELAY POSITION .
	REFERENCE (REF)	− 128 ～ 127	Set DELAY (REF) POSITION.
	REFERENCE? (REF?)		0 ～ 4095
	DELTA (DEL)	− 128 ～ 127	Set DELAY(DELTA) POSITION.
	DELTA? (DEL?)		0 ～ 4095
	DATA? (DAT?)		Value of DELAY ΔT or 1/ΔT. See Note 1.
DELAY? (DEL?)			[MODE] (REF)(DELTA) [DATA]

Note 1: When SWEEP VARIABLE (17) is enabled, unit of measure is DIV.

90.8.31

8942988A

6.4.4 Commands for Triggering

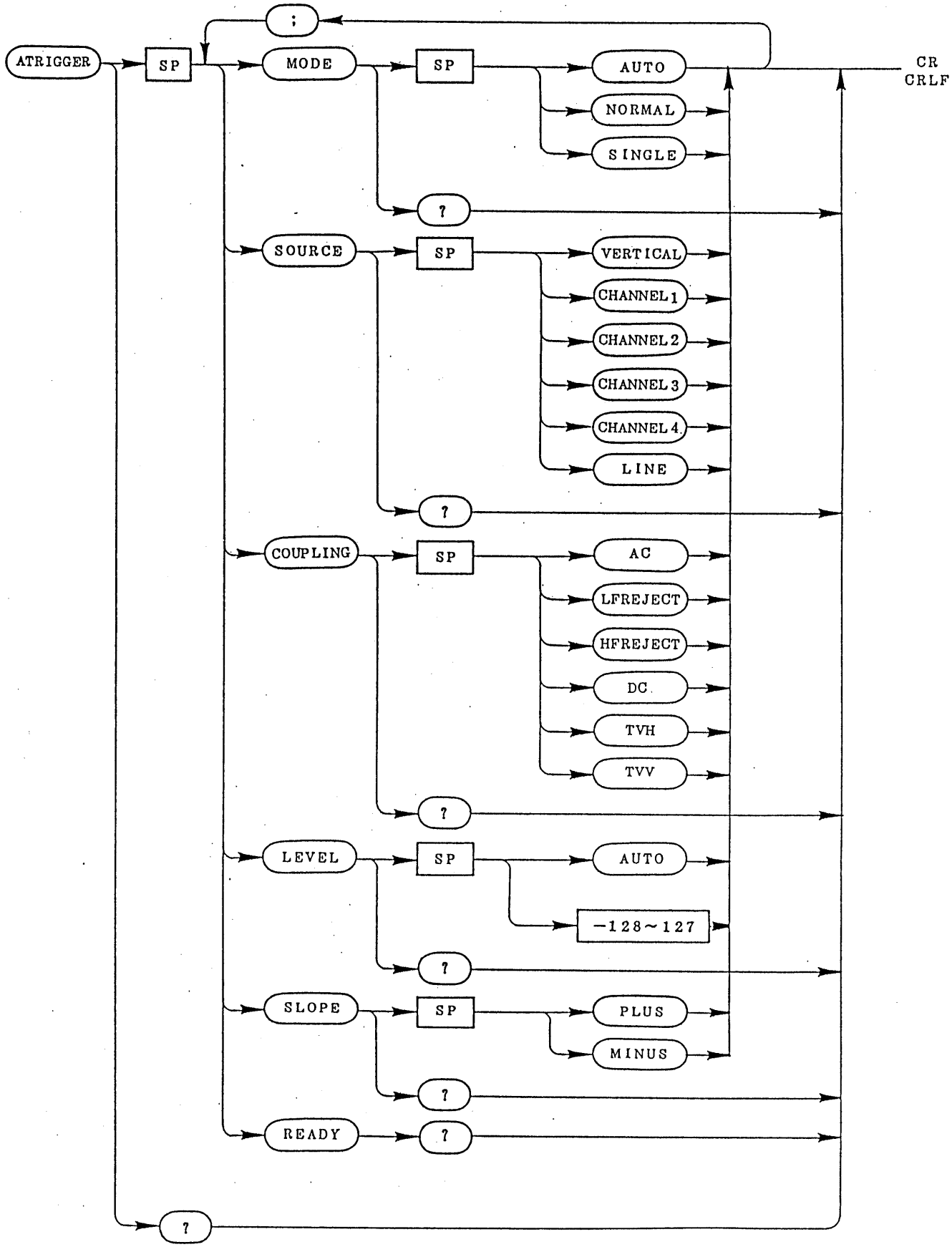

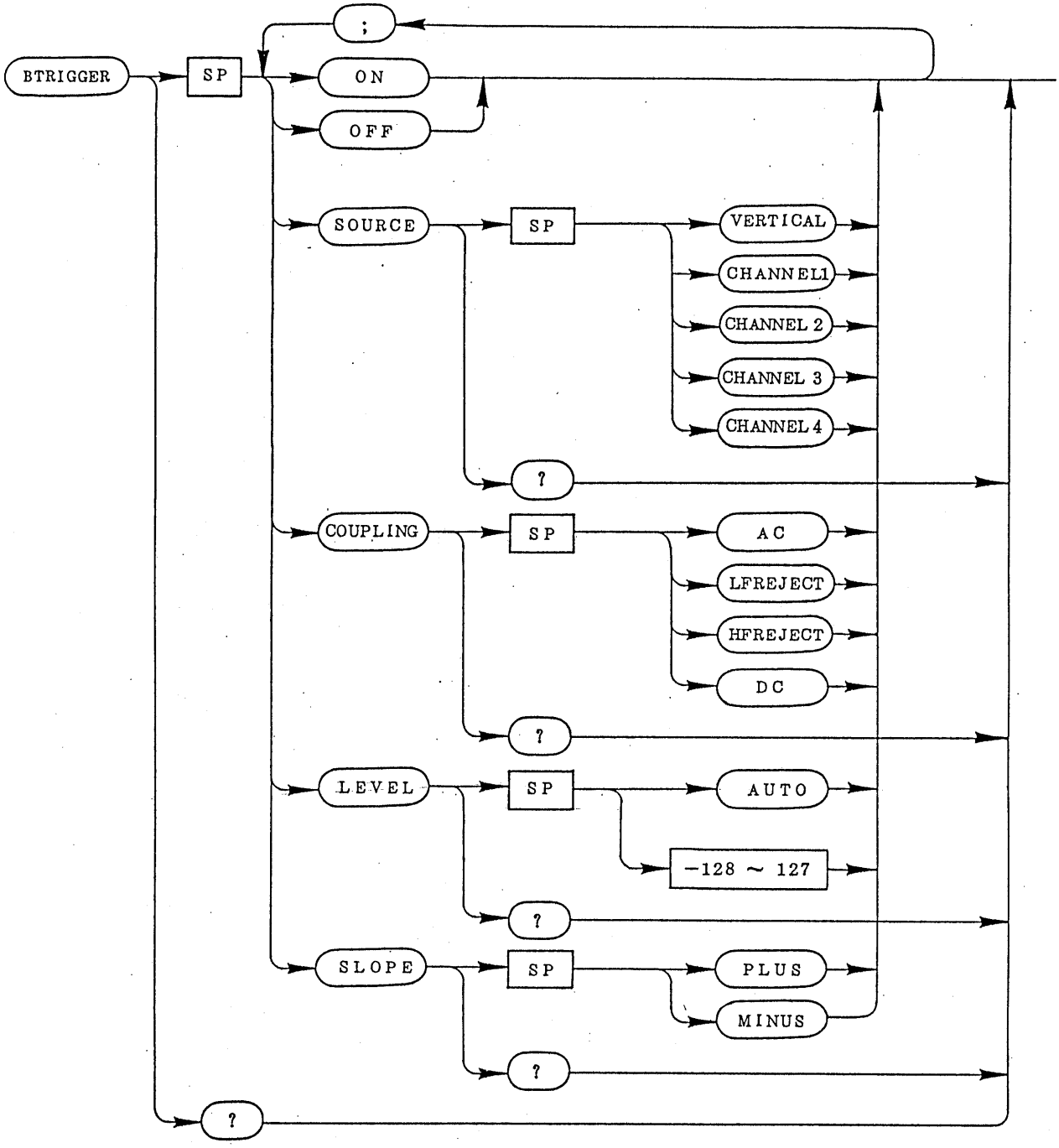

'90.8.31

89430A

Header	Argument		Action
ATRIGGER (ATR)	MODE (MOD)	AUTO (AUT)	Set A trigger to AUTO mode.
		NORMAL (NOR)	Set A trigger to NORMAL mode.
		SINGLE (SIN)	Set A trigger to SINGLE mode.
	MODE? (MOD?)		AUTO, NORMAL, SINGLE
	SOURCE (SOU)	VERTICAL (VER)	Set A trigger source to VERT.
		CHANNEL 1 (CH 1)	Set A trigger source to CH1.
		CHANNEL 2 (CH 2)	Set A trigger source to CH2.
		CHANNEL 3 (CH 3)	Set A trigger source to CH3.
		CHANNEL 4 (CH 4)	Set A trigger source to CH4.
		LINE (LIN)	Set A trigger source to LINE
	SOURCE? (SOU?)		VERT, CH1, CH2, CH3, CH4 LINE
	COUPLING (COU)	AC	Set A trig-in coupling to AC.
		LFREJECT (LFR)	Set A trig-in coupling to LF-REJ.
		HFREJECT (HFR)	Set A trig-in coupling to HF-REJ.
		DC	Set A trig-in coupling to DC.
		TVH	Set A trig-in coupling to TVH.
		TVV	Set A trig-in coupling to TVV.
	COUPLING? (COU?)		AC, LFR, HFR, DC, TVH, TVV
	LEVEL (LEV)	−128~127	Set A trigger level.
		AUTO	Set A trigger level to AUTO.
	LEVEL? (LEV?)		−128 ~ 127, AUTO

90.8.31

89430 1A

	SLOPE (SLO)	PLUS (PLU)	Set A trigger slope to "+"
		MINUS (MIN)	Set A trigger slope to "−"
	SLOPE? (SLO?)		PLUS, MINUS
ATRIGGER? (ATR?)			[MODE] [SOURCE] [COUPLING] [LEVEL] [SLOPE]
BTRIGGER (BTR)	ON		Turn on B trigger.
	OFF		Turn off B trigger.
	SOURCE (SOU)	VERTICAL (VER)	Set B trigger source to VERT.
		CHANNEL 1 (CH 1)	Set B trigger source to CH1.
		CHANNEL 2 (CH 2)	Set B trigger source to CH2.
		CHANNEL 3 (CH 3)	Set B trigger source to CH3.
		CHANNEL 4 (CH 4)	Set B trigger source to CH4.
	SOURCE? (SOU?)		VERT, CH1, CH2, CH3, CH4
	COUPLING (COU)	AC	Set B trig-in coupling to AC.
		LFREJECT (LFR)	Set B trig-in coupling to LFR.
		HFREJECT (HFR)	Set B trig-in coupling to HFR.
		DC	Set B trig-in coupling to DC.
	COUPLING? (COU?)		AC, LFR, HFR, DC
	LEVEL (LEV)	−128 ~ 127	Set B trigger level.
		AUTO	Set B trigger level to AUTO.
	LEVEL? (LEV?)		−128 ~ 127, AUTO
	SLOPE (SLO)	PLUS (PLU)	Set B trigger slope to "+".
		MINUS (MIN)	Set B trigger slope to "−".
	SLOPE? (SLO?)		PLUS, MINUS
BTRIGGER? (BTR?)			[ON/OFF] [SOURCE] [COUPLING] [LEVEL] [SLOPE]

'90.8.31
89430 2A

6.4.5 Commands for Cursors

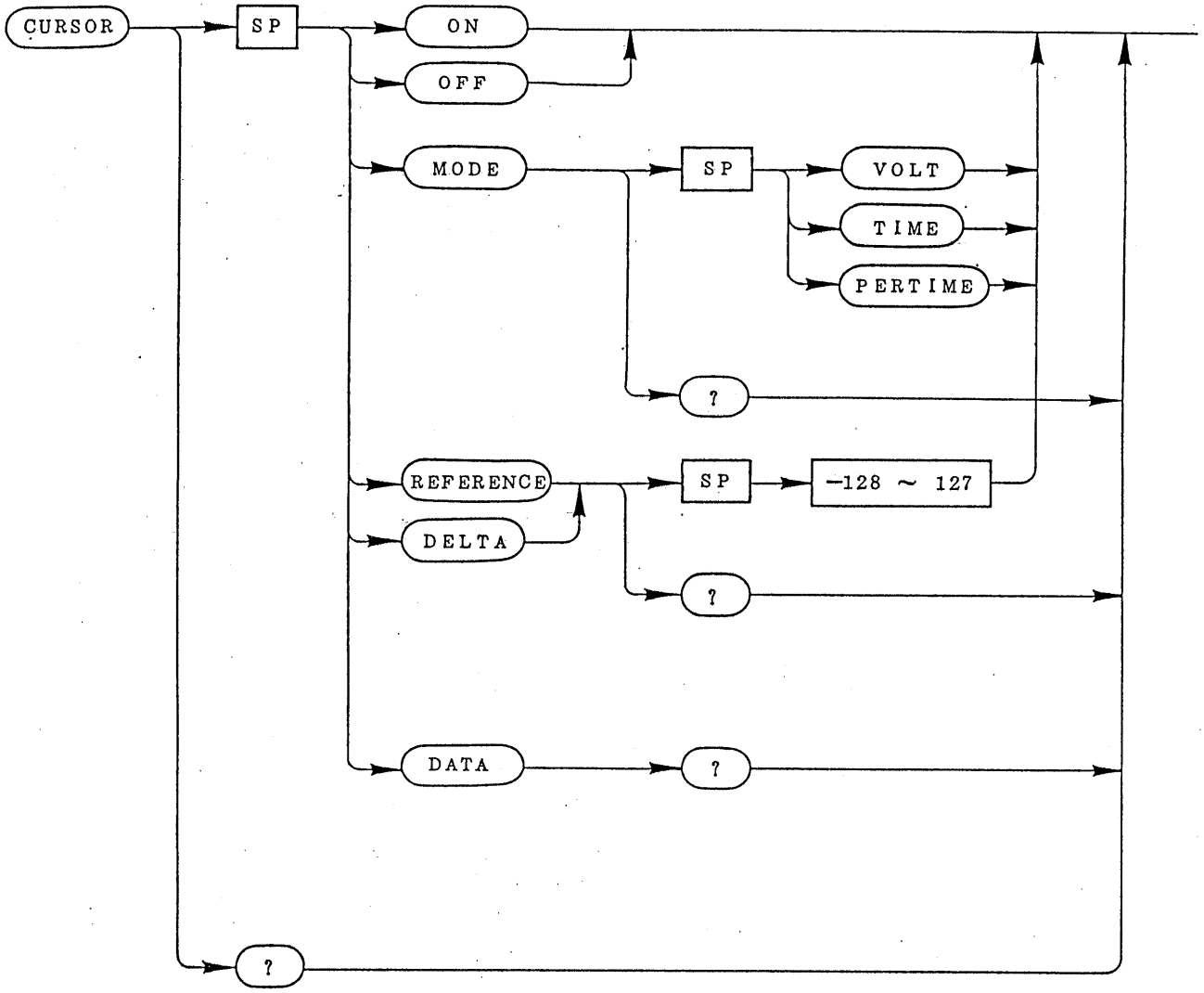

90.8.31

8943038A

Header	Argument		Action
CURSOR (CUR)	ON		Turn on cursor.
	OFF		Turn off cursor.
	MODE (MOD)	VOLT (VOL)	Set cursor mode to ΔV.
		TIME (TIM)	Set cursor mode to ΔT.
		PERTIME (PER)	Set cursor mode to 1/ΔT.
	MODE? (MOD?)		VOLT, TIME, PERTIME
	REFERENCE (REF)	− 128 ~ 127	Set CURSOR (REF) POSITION.
	REFERENCE? (REF?)		0 ~ 4095
	DELTA (DEL)	− 128 ~ 127	Set CURSOR (DELTA) POSITION.
	DELTA? (DEL?)		0 ~ 4095
	DATA? (DAT?)		Value measured with cursors.
CURSOR? (CUR?)			[ON/OFF] [MODE] [REFERENCE] [DELTA] [DATA]

'90.8.31

89A304A

6.4.6 Commands for DVM and Counter

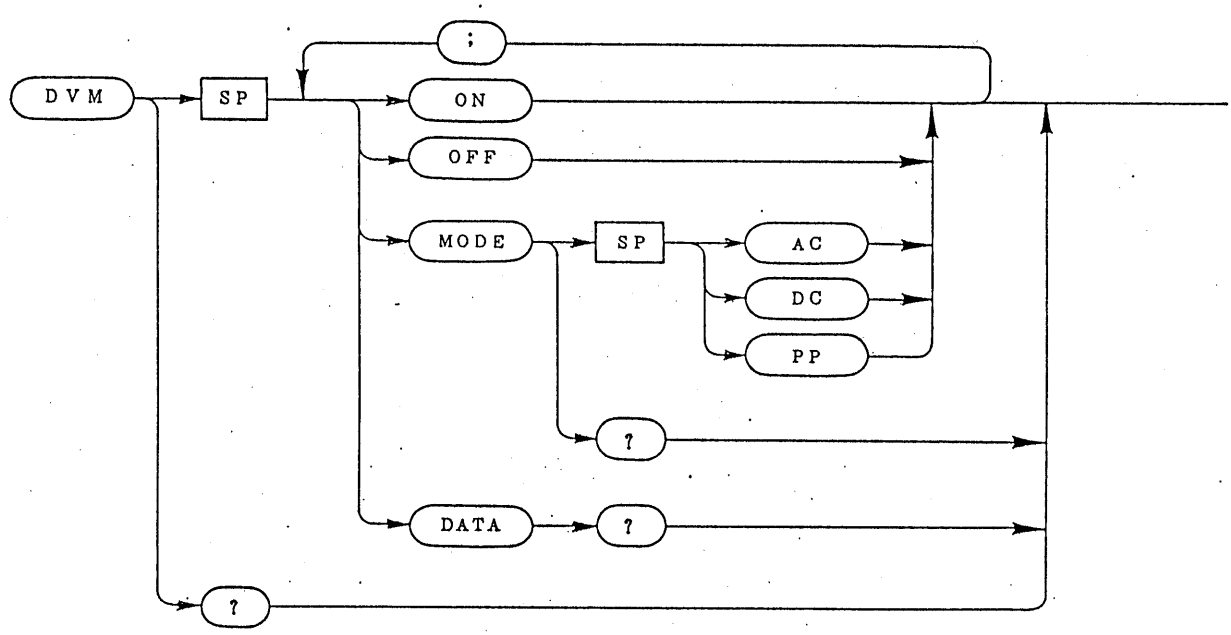

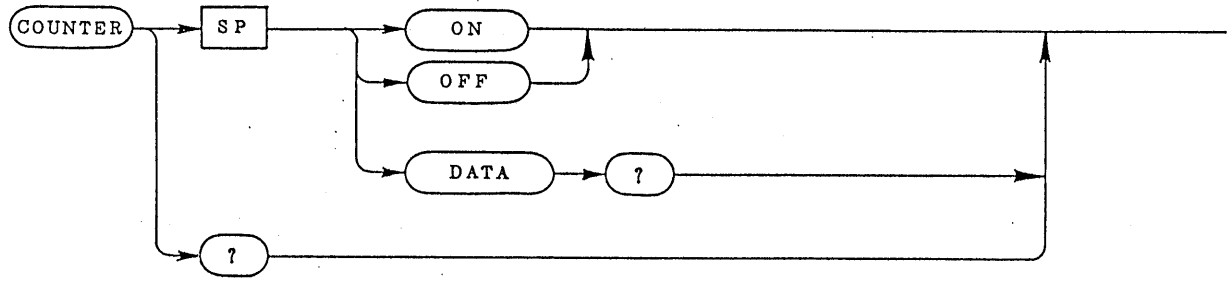

Header	Argument		Action
DVM	ON		Turn on DVM.
	OFF		Turn off DVM.
	MODE (MOD)	AC	Set DVM mode to AC.
		DC	Set DVM mode to DC.
		PP	Set DVM mode to p-p.
	MODE? (MOD?)		AC, DC, PP
	DATA? (DAT?)		Value measured with DVM.
DVM?			[ON/OFF] [MODE] [DATA]
COUNTER (COU)	ON		Turn on counter.
	OFF		Turn off counter.
	DATA? (DAT?)		Value measured with counter.
COUNTER? (COU?)			[ON/OFF] [DATA]

'90.8.31

89430SA

6.4.7 Commands for Step Control

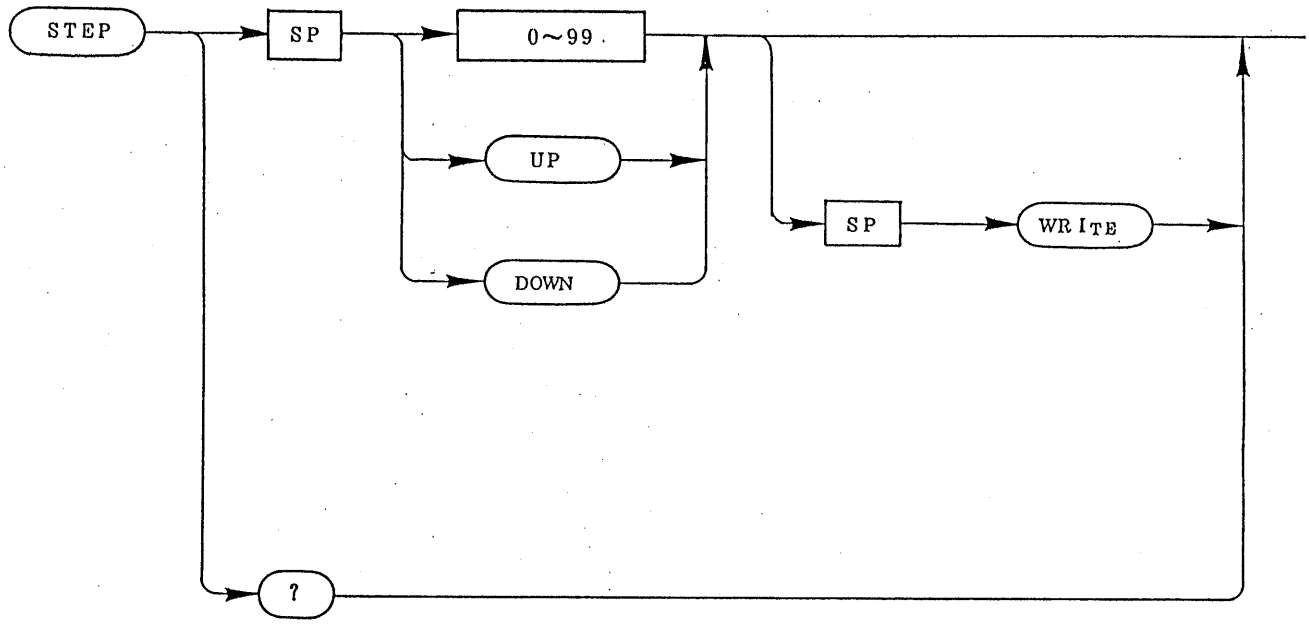

Header	Argument	Action
STEP (STE)	0 ~ 99	Read data on step memory.
	WRITE (WRI)	Write data on step memory.
	UP	Increment step address by 1.
	WRITE (WRI)	Increment step address by 1 and then write data on memory.
	DOWN (DOW)	Decrement step address by 1.
	WRITE (WRI)	Decrement step address by 1 and then write data on memory.
STEP? (STE?)		Current step address 0 ~ 99

'90.8.31

89430GA

6.4.8 Commands for Probe Selector Control

(Valid only when probe selector is connected)

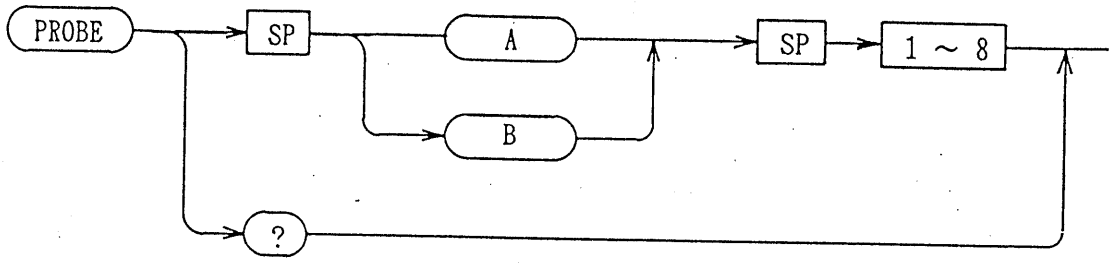

Header	Argument		Action
PROBE	A	1 ~ 8	Assign Channel A for Probe.
(PRO)	B	1 ~ 8	Assign Channel B for Probe.
PROBE?			Current assignment
(PRO?)			A1 ~ 8 B1 ~ 8

90、8、31

9047744

6.4.9 Commands for Storage

(1) Commands which always operate when in storage mode

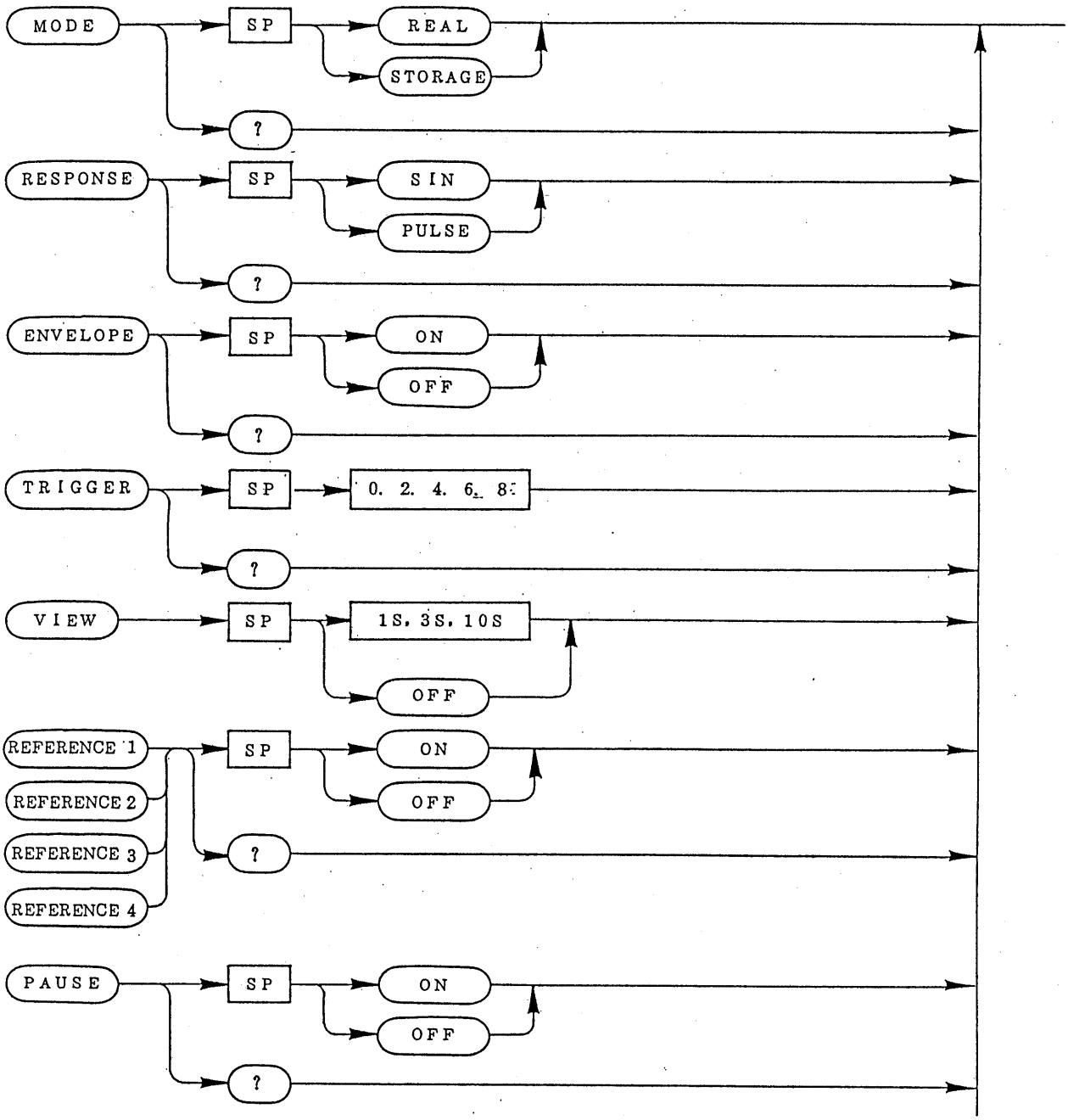

'90. 8. 31

89 4 30 7A

Header	Argument	Action
MODE (MOD)	REAL (REA) STORAGE (STO)	Set to realtime mode. Set to stostorage mode.
MODE? (MOD?)		REAL, STORAGE
RESPONSE (RES)	SIN PULSE (PUL)	Set to sine interpolation. Set to pulse interpolation.
RESPONSE? (RES?)		SIN, PULSE
TRIGGER (TRI)	0 , 2 , 4 , 6 , 8	Set triggerrig point. Unit in DIV.
TRIGGER? (TRI?)		0 , 2 , 4 , 6 , 8
VIEW (VIE)	OFF, 1 S, 3 S, 10S	Set viewtime. Unit in sec.
VIEW? (VIE?)		OFF, 1 S, 3 S, 10S
REFERENSE 1 (REF 1)	ON OFF	Turn on REF1. Turn off REF1.
REFERENSE 1 ? (REF 1 ?)		ON, OFF [ON/OFF][VOLT(UNCAL)][COUPLING][TIME/DIV]
REFERENSE 2 (REF 2)	ON OFF	Turn on REF2. Turn off REF2.
REFERENSE 2 ? (REF 2 ?)		ON, OFF
REFERENSE 3 (REF 3)	ON OFF	Turn on REF3. Turn off REF3.
REFERENSE 3 (REF 3 ?)		ON, OFF
REFERENSE 4 (REF 4)	ON OFF	Turn on REF4. Turn off REF4.
REFERENSE 4 ? (REF 4 ?)		ON, OFF

'90.8.31

89430BA

Header	Argument	Action
PAUSE (PAU)	ON OFF	Turn on PAUSE. Turn off PAUSE.
PAUSE? (PAU?)		ON, OFF

2) Commands for 50ms/DIV - 10μs/DIV

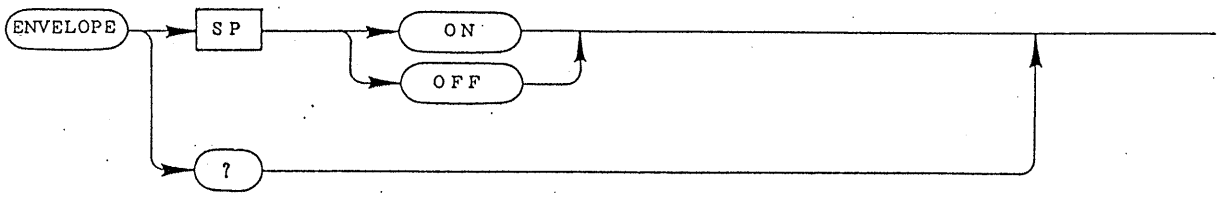

Header	Argument	Action
ENVELOPE (ENV)	ON OFF	Turn on ENVELOPE mode. Turn off ENVELOPE mode.
ENVELOPE? (ENV?)		ON, OFF

'90. 8. 31

89430 9A

3) Commands which are effective only when in PAUSE ON

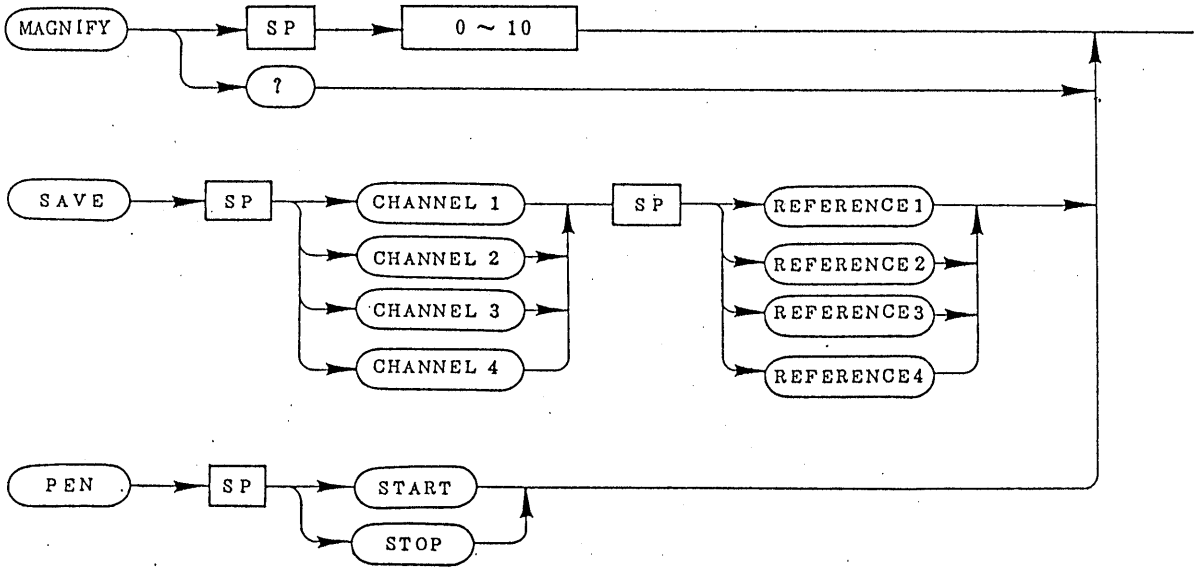

Header	Argument		Action
MAGNIFY (MAG)	0 , 1 ,···· 10		Set magnification point. Unit in DIV
MAGNIFY? (MAG?)			0 , 1 ,···· 10
SAVE (SAV)	CHANNEL 1 (CH 1) CHANNEL 2 (CH 2) CHANNEL 3 (CH 3) CHANNEL 4 (CH 4)	REFERENSE 1 (REF 1) REFERENSE 2 (REF 2) REFERENSE 3 (REF 3) REFERENSE 4 (REF 4)	Save waveform data in reference memory. Error message is sent if specified channel is not ON. If specified reference memory is OFF, it is automatically turned ON.
PEN	START (STA) STOP (STO)		Start PEN output. Stop PEN output.

'90. 8. 31

89431OA

(4) Commands for send/receive of waveform data

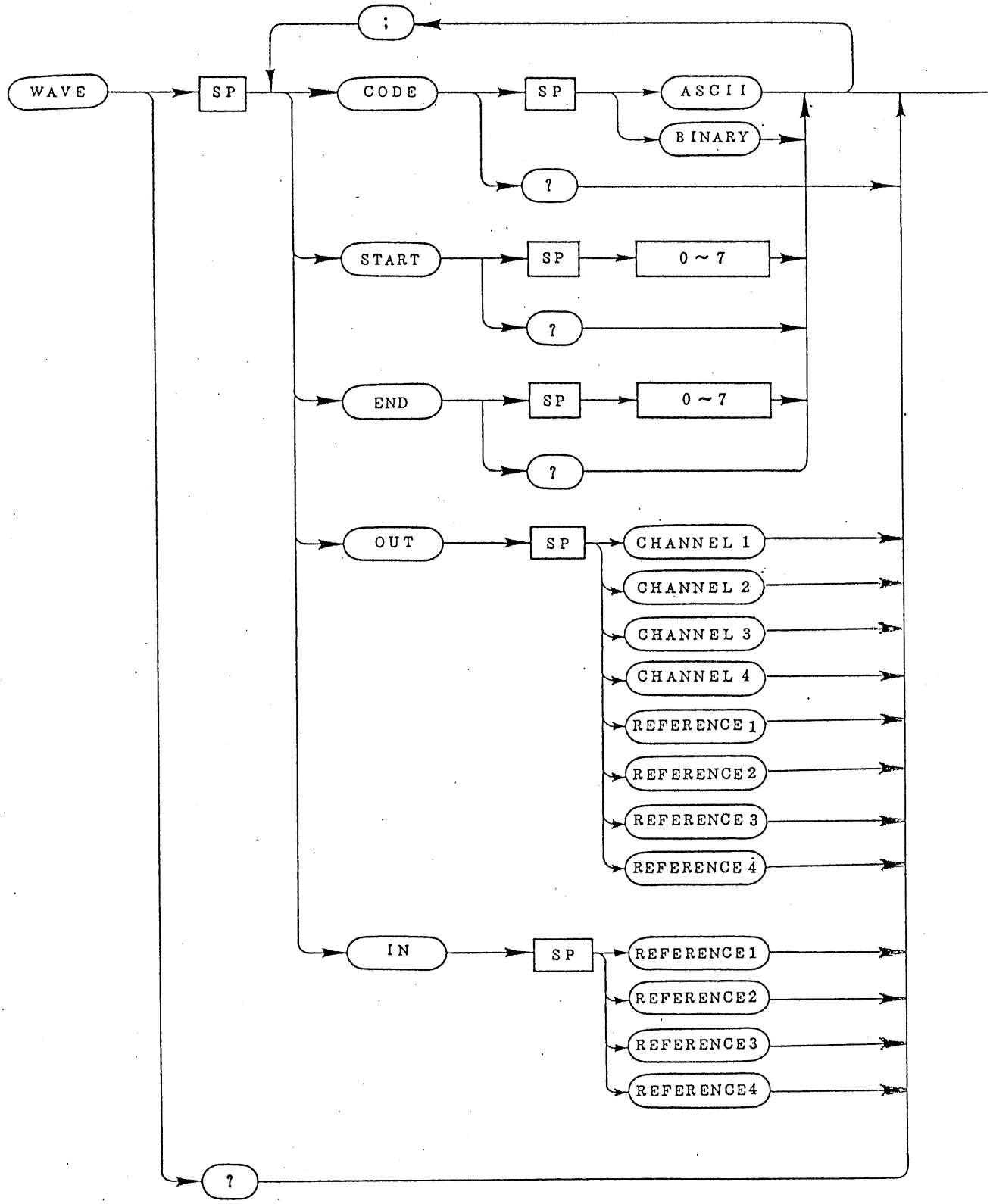

Header	Argument		Action
WAVE (WAV)	CODE (COD)	ASCII (ASC)	Use ASCII codes for waveform data transfer. (See Note.)
		BINARY (BIN)	Use binary codes for waveform data transfer. (See Note.)
	CODE? (COD?)		ASCII, BINARY
	START (STA)	0 ~ 7	Set starting block of waveform data.
	START? (STA?)		
	END	0 ~ 7	Set ending block of waveform data.
	END?		
	OUT	CHANNEL 1 (CH 1)	Send waveform data of CH1.
		CHANNEL 2 (CH 2)	Send waveform data of CH2.
		CHANNEL 3 (CH 3)	Send waveform data of CH3.
		CHANNEL 4 (CH 4)	Send waveform data of CH4.
		REFERENSE 1 (REF 1)	Send waveform data of REF1.
		REFERENSE 2 (REF 2)	Send waveform data of REF2.
		REFERENSE 3 (REF 3)	Send waveform data of REF3.
		REFERENSE 4 (REF 4)	Send waveform data of REF4.
	IN	REFERENSE 1 (REF 1)	Receive waveform data onto REF1.
		REFERENSE 2 (REF 2)	Receive waveform data onto REF2.
		REFERENSE 3 (REF 3)	Receive waveform data onto REF3.
		REFERENSE 4 (REF 4)	Receive waveform data onto REF4.
WAVE? (WAV?)			[CODE] [START] [END]

Note: "WAVE IN" is for binary codes only.

'90. 8. 31

89431 12A

6.5 Output for GP-IB Plotter

With the conventional oscilloscopes, no hardcopies of the waveform data displayed on the CRT screen can be obtained unless a rather troublesome method with a camera or a computer system is employed. The COM7XX1A Series Oscilloscope delivers an output of the waveform data displayed on the CRT, allowing you to directly obtain hardcopies by operating it in the storage mode and employing a GP-IB plotter (HP-GL compatible type). When in the plotter output mode, the starting point of plotting by the plotter conforms with the left-end point of the CRT graticule, the X10 MAG function is ignored, and no information is delivered for the VIEW TIME "◢" and pause functions.

(1) Connecting the Instruments

Connect a GP-IB plotter or plotters directly to the COM7XX1A Oscilloscope. (No other instruments are needed.)

(2) Setting the Instrument

COM7XX1A: Before turning on power of the oscilloscope, set the GP-IB switches (63) to the TALK ONLY mode. (See page 6-8 TALK ONLY.)

Plotter: Set the plotter to the LISTEN ONLY mode.

Note: If the oscilloscope has already acquired a waveform data with its GP-IB switches (63) set at a normal address (0 - 30) and turning on its power, save the waveform data in the reference memory, turn off power of oscilloscope once, set the GP-IB switch (63) to the TALK ONLY mode, and then turn on power again.

(3) Operating Procedure

(a) Set the oscilloscope to the STORAGE mode and display on its CRT screen the CRT readout data and waveform data to be hardcopied.

'90.8.31

89431 3A

(b) If the center lines of the graticule are not required to be hardcopied, turn off the SCALE (5) (graticule illumination control). The hardcopied data will be as shown in the left hand one of the illustrations.

If the CRT readout data (data indicated with characters) is not required to be hardcopied, turn off the READOUT (5). The hardcopied data will be as shown in the left hand one of the illustrations.

(c) 1. Keeping pressed the 2nd FUNCTION KEY (43), press the "(PLT 1)" key of the HORIZ MODE (36). The hardcopy will be drawn with a scale factor of double of that of the CRT graticule.

2. Keeping pressed the 2nd FUNCTION KEY (43), press the "PLT 2)" key of the HORIZ MODE (36). The hardcopy will be drawn with a scale factor identical with that of the CRT graticule.

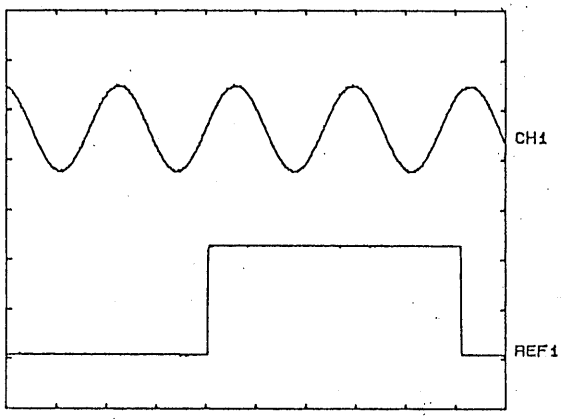

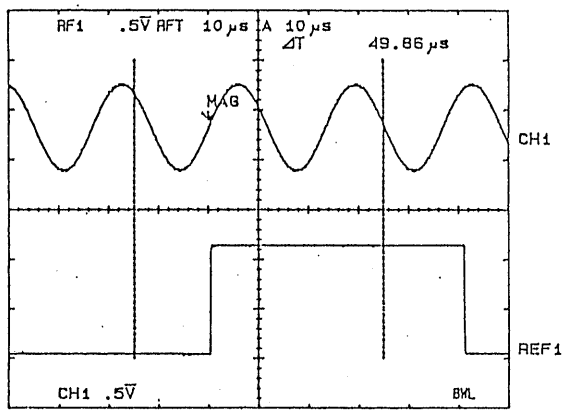

(d) To abort hardcopying in progress, press the 2nd FUNCTION KEY.

90.8.31
89431 4A

6.6 Programming Examples

6.6.1 Examples of Programming for IBM Personal Computers and compatibles (GW-BASIC/QuickBASIC with National Instruments' GP-IB card)

(1) Initial Setting

Set an address for the oscilloscope with GP-IB switches ⑯ .
Modify the NI-488/MS-DOS handler (GPIB.COM). To modify GPIB.COM file, you may execute IBCONF.EXE utility as follows:

```
C:\USER>ibconf \GPIB.COM↵
```

After modification, append a following line to your CONFIG.SYS file:

```
device=GPIB.COM
```

Start up MS-DOS again.

For this Programming example, set the parameters as shown in the following table:

	Address	Delimiter
COM7xxxA	2	EOI

NI-488/DOS handler (GPIB.COM)	
Device: COM7000	
Primary GPIB Address	2
Secondary GPIB Address	NONE
Timeout setting	T10s
EOS byte	00H
Terminate Read on EOS	no
Set EOI with EOS on Write	no
Type of compare on EOS	7-bit
Set EOI w/last byte of Write	yes

COM7xxxA GP-IB switches

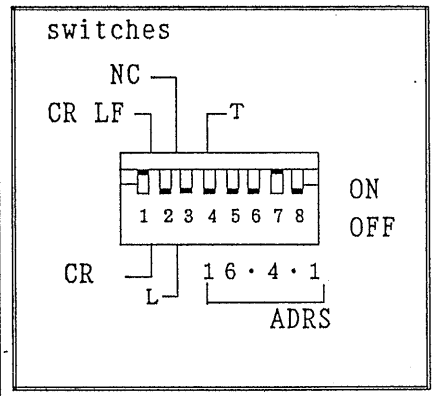

Note for GW-BASIC user:
Before running an example program, execute MERGE statement.

```
LOAD "filename.bas"
MERGE "DECL.BAS"
RUN
```

Note for QuickBASIC(ver4.0)user:
When starting QB.EXE, load the QuickLibrary..

```
C:\USER>QB /L QBIB4.QLB↵
```

'90.8.31

(2) Programming Example for Panel Control

This programming example is for controling the oscilloscope from the PC Keyboard to the functions the same with those done by the oscilloscope panel controls. In response to the prompt "command>" displayed on the PC, enter a command (string for the required functions) from the keyboard. Of the Execution Example Program(1,1), enter the underlined string. Symbol ↵ denotes the ENTER key.

Program (1,1)

```
100 UDNAME$ = "COM7000"
110 CALL IBFIND(UDNAME$ , KIK%)
120 CALL IBCLR(KIK%)
130 '
140    WRT$ = "EOI ONLY": CALL IBWRT(KIK%, WRT$)
150 '
160    WHILE 1
170        INPUT "command>", WRT$
180        CALL IBWRT(KIT%, WRT$)
190        FOR I% = 0 TO 1000: NEXT I%
200        CALL IBCLR(KIK%)
210    WEND
220 END
```

90 47 46

(Comments)

100~110 Open device "COM7000", and store a unit descriptor in KIK%.

120 Execute Selected Device Clear (SDC).

140 Send "EOI ONLY" command.

170 Receive a command entered from PC keyboard.

180 Send a command received from PC keyboard.

190 Timer

200 Execute SDC for in case of GP-IB syntax error. (This statement may be deleted if not necessary.)

160~220 WHILE 1 ~ WEND is an infinite loop.

Note:

If an invalid command is given, an error message "GPIB ERR" is displayed on oscilloscope and SRQ is generated. To cope with this, the oscilloscope must receive Device Clear. If a Device Clear is received when the processing for the command sent by statement # 180 is in progress, the processing is aborted. In order to wait until the processing is complete, statement line# 190 "TIMER" must be inserted.

Execution Example Program (1.1)

[1] To select CH1 input coupling:

command>CH1 COUPLING AC↵

[2] To select storage mode:

command>MODE STORAGE↵

[3] TO set to PAUSE:

command>PAUSE ON↵

[4] To set to SAVE:

command>SAVE CH1 REF1↵

Of other panels also, the functions of the controls can be dictated through the PC keyboard. That is, all commands expect "WAVE IN" and "WAVE OUT" can be given through the PC keyboard.

'90.8.31

90747

(3) Programming Examples to Read Panel Setting and Measured Values

Example of programs to read the panel setting values and measured values, and to recover the error automatically when an invalid command is given are described below.

Program (1.2)

```
100 UDNAME$ = "COM7000"
110 CALL IBFIND (UDNAME$, KIK%)
120 CALL IBCLR (KIK%)
130 '
140     WRT$ = "EOI ONLY":  CALL IBWRT (KIK%, WRT$)
150 '
160     WHILE 1
170         INPUT "command>", WRT$
180         CALL IBWRT(KIK%, WRT$)
190         RD$ = SPACE$(32):   CALL IBRD (KIK%, RD$)
200         PRINT TAB(9); RD$
210     WEND
220 END
```

(Comments)

100~110 Open device "COM7000", and store a unit descriptor in KIK%

120 Execute Selected Device Clear (SDC).

140 Send "EOI ONLY" command.

170 Receive a query entered from PC keyboard. However, you can type an only string terminating '?' character.

180 Send a query received from PC keyboard.

190 Receive setting value or other responses.

200 Display the received setting value on PC.

160~210 WHILE 1 ~ WEND is an infinite loop.

Note:

If an invalid command is given in the above program, it will stop at statement # 190 and aborted by Timeout. Therefore, this program to release the error recovery must be added.

90.8.31

9047748

Program (1.3)

```
100 UDNAME$ = "COM7000"
110 CALL IBFIND (UDNAME$, KIK%)
120 CALL IBCLR (KIK%)
130 '
140     WRT$ = "EOI ONLY":  CALL IBWRT (KIK%, WRT$)
150 '
160     WHILE 1
170         INPUT "command>", WRT$
180         CALL IBWRT (KIK%, WRT$)
190         FOR I% = 0 TO 1000: NEXT I%
200         CALL IBRSP (KIK%, SPR%)
210         IF SPR% AND &H3 THEN GOSUB 1000: GOTO 240
220         RD$ = SPACE$ (32):   CALL IBRD (KIK%, RD$)
230         PRINT TAB (9); RD$
240     WEND
250 END
1000 '  ----------------------------------------------------------------------
1010 '  Syntax Error Routine
1020 '  ----------------------------------------------------------------------
1030        CALL IBCLR (KIK%)
1040        PRINT "GP-IB / Syntax Error"
1050    RETURN
```

(Comments)

100~110 Open device "COM7000", and store a unit descriptor in KIK%.

120 Execute Selected Device Clear (SDC).

140 Send "EOI ONLY" command.

170 Receive a query entered from PC keyboard. However, you can type an only string terminating '?' character.

180 Send a query received from PC keyboard.

190 Timer for stabilizing Status Byte Value.

200 Execute Serial Polling, and store the Status Byte in SPR%.

210 If the nil-bit or 1st-bit of SPR% are active, it seems GP-IB syntax error. Then, the subroutine of line# 1000 should be invoked.

220 Otherwise, receive setting value or other responses.

1000 This subroutine should be invoked when GP-IB syntax error is occured.

'90.8.31

90 07 49

```
1030        Execute SDC, and effect clearing Status Byte.
1040        Display the GP-IB Syntax Error message.
1050        Return from the subroutine.
```

Execution Example Program (1.3)
[1] Setting state of CH1:

```
          command>CH1 COUPLING? ↵
       (response) DC
```

[2] Setting state of MODE:

```
          command>MODE? ↵
       (response) REAL
```

[3] To set to ATIME:

```
          command>ATIME? ↵
       (response) 10US
```

Of other panels also, the functions of the controls can be dictated through the PC keyboard. The underlined items of the above commands are those to be manually entered through the keyboard. That is, all commands except "WAVE IN" and "WAVE OUT" can be given through the PC keyboard.

(4) Programming Examples to Set Panel Controls and Read Setting Values

This program is modified one of Program (1.3) so that setting of panel controls also can be done.

Program (1.4)

```
100 UDNAME$ = "COM7000"
110 CALL IBFIND (UDNAME$ , KIK%)
120 CALL IBCLR (KIK%)
130 '
140     WRT$ = "EOI ONLY":  CALL IBWRT (KIK%, WRT$ )
150 '
160     WHILE 1
170         INPUT "command>", WRT$
```


'90.8.31
90750

```
 180         CALL IBWRT (KIK%, WRT$)
 190         FOR I% = 0 TO 1000: NEXT I%
 200         CALL IBRSP (KIK%, SPR%)
 210         IF SPR% AND &H3 THEN GOSUB 1000: GOTO 250
 220         IF RIGHT$(WRT$, 1) <> "?" THEN 250
 230         RD$ = SPACE$(32):   CALL IBRD (KIK%, RD$)
 240         PRINT TAB (9); RD$
 250     WEND
 260 END
1000 '-------------------------------------------------------------------------------
1010 '  Syntax Error Routine
1020 '-------------------------------------------------------------------------------
1030        CALL IBCLR (KIK%)
1040        PRINT "GP-IB /.Syntax Error"
1050    RETURN
```

'90.8.31

(Comments)

100~110 Open device "COM7000", and store a unit descriptor in KIK%.

120 Execute Selected Device Clear (SDC).

140 Send "EOI ONLY" command.

170 Receive a command or a query entered from PC keyboard.

180 Send a command or query received from PC keyboard.

190 Timer for stabilizing Status Byte Value.

200 Execute Serial Polling, and store the Status Byte in SPR%.

210 If the nil-bit or 1st-bit of SPR% are active, it seems GP-IB syntax error. Then, the subroutine of line# 1000 should be invoked.

220 Otherwise, check whether or not query. If not the query, continue the WHILE loop.

230 Otherwise, receive setting value or other responses.

240 Display the received setting value on PC.

1000 This subroutine should be invoked when GP-IB syntax error has occured.

1030 Execute SDC, and effect clearing Status Byte.

1040 Display the GP-IB Syntax Error message.

1050 Return from the subroutine.

9047751

(5) Examples of Commands for Control of Cursors and Reading of Measured Values.

Examples of commands for control of cursors and reading of values measured with cursors, using the program (1.4) are given below.

[1] "CURSOR MODE" command, with program of (1.4)

command>CURSOR MODE VOLT ↵

[2] "CURSOR DELTA" command, with program of (1.4)

command>CURSOR DELTA 50↵

Note:
Even when in the remote mode, the cursors can be vernier-controlled with the READOUT control.

[3] Moving the cursors with the READOUT control, read the measured value. "CURSOR DATA?" query, with program of (1.4)

command>CURSOR DATA?↵
(response) 12.34 E-3

The underlined items of above commands are those to be manually entered through the keyboard. For ↵, press ENTER key.

(6) Examples of Commands for control of DVM and Counter, and Reading of Measured Values

Examples of commands for control of DVM and counter and reading of the measured values, using the program (1.4), are given below.
When in the remote mode with GP-IB, the DVM and the counter can be ON/OFF-controlled independently.

[1] "DVM MODE" command, with program of (1.4)

command>DVM MODE AC↵

'90.8.31
9047952

[2] "DVM DATA?" query, with program of (1.4)

command>DVM DATA?↵
(response) 12.34 E-3

[3] "COUNTER MODE" command, with program of (1.4)

command>COUNTER ON↵

[4] "COUNTER DATA?" query, with program of (1.4)

command>COUNTER DATA?↵
(response) 12.34 E-6

The underlined items of above commands are those to be manually entered through the keyboard. For ↵, press ENTER key.

(7) Examples of Reading of Measured Values by Status Byte observation (DVM and Counter)

Examples of reading of measured values by Status Byte observation, using the program (1.5), are given below. When Counter measurement is completed, 2nd-bit of Status byte should be active. When DVM measurement is completed, 3rd-bit of Status byte should be active. In this example, you must observe Status Byte by executing Serial Polling. As the measured data is read, the status Byte is cleared. Therefore Device Clear is not necessary.

Program (1.5)

```
100 UDNAME$ = "COM7000"
110 CALL IBFIND(UDNAME$ ,KIK%)
120 CALL IBCLR(KIK%)
130 '
140     WRT$ = "EOI ONLY"          CALL IBWRT(KIK%, WRT$)
150     WRT$ = "MODE REAL":        CALL IBWRT(KIK%, WRT$)
160     WRT$ = "DVM ON":           CALL IBWRT(KIK%, WRT$)
170     WRT$ = "COUNTER ON":       CALL IBWRT(KIK%, WRT$)
180     WRT$ = "SRQ OFF":          CALL IBWRT(KIK%, WRT$)
```


90.8.31
9047753

```
190 '
200     WHILE 1
210          CALL IBRSP(KIK%, SPR%)
220          IF (SPR% AND &H4) <> 0 THEN GOSUB 2000
230          IF (SPR% AND &H8) <> 0 THEN GOSUB 3000
240          FOR I% = 0 TO 100: NEXT I%
250     WEND
260 END
2000 '   ------------------------------------------------------------------------
2010 '   Frequency Counter    : Reading Routine
2020 '   ------------------------------------------------------------------------
2030          WRT$ = "COUNTER DATA? ": CALL IBWRT(KIK%, WRT$)
2040          CNTR$ = SPACE$(32):      CALL IBRD(KIK%, CNTR$)
2050          PRINT TAB(25); "COUNTER = "; CNTR$
2060     RETURN
3000 '   ------------------------------------------------------------------------
3010 '   DVM                    : Reading Routine
3020 '   ------------------------------------------------------------------------
3030          WRT$ = "DVM DATA?":         CALL IBWRT(KIK%, WRT$)
3040          DVM$ = SPACE$(32):          CALL IBRD(KIK%, DVM$)
3050          PRINT TAB(25);   "    DVM = "; DVM$
3060     RETURN
```

(Comments)

100~110 Open device"COM7000",and store a unit descriptor in KIK%.

120 Execute Selected Device Clear (SDC).

140 Send "EOI ONLY" command.

150 Set to Real Mode.

160 Set to DVM on.

170 Set to Counter on.

180 Disable SRQ generation.

210 Execute Serial Polling, and store the Status Byte in SPR%.

220 If the 2nd-bit of SPR% is active, it seems Counter measurement is complete. Then the subroutine of line# 2000 should be invoked.

230 If the 3rd-bit of SPR% is active,it seems DVM measurement is complete. Then the subroutine of line# 3000 should be invoked.

240 Timer

'90、8、31

9004754

210~250 WHILE 1~WEND is an infinite loop.
2000 This subroutine should be called when Counter is complete.
2030~2060 Read the measured Counter data, and display it.
3000 This subroutine should be called when DVM is complete.
3030~3060 Read the measured DVM data, and display it.

(8) Examples of Programs for Transfer of Waveform Data.

This section introduces programs to send waveform data acquired in the storage to the PC. The program (1.1) through (1.5) are not usable for this purpose. Examples of program for individual cases are shown below.

[1] program to receive data (binary) from oscilloscope.

Program (1.6)

```
100 DIM WAVDAT%(1023)
110 CNT% = 1024
120 UDNAME$ = "COM7000"
130 CALL IBFIND(UDNAME$, KIK%)
140 CALL IBCLR(KIK%)
150 '
160     WRT$ = "EOI ONLY":          CALL IBWRT(KIK%, WRT$)
170     WRT$ = "MODE STORAGE":      CALL IBWRT(KIK%, WRT$)
180     WRT$ = "WAVE CODE BINARY":  CALL IBWRT(KIK%, WRT$)
190     WRT$ = "WAVE START 0":      CALL IBWRT(KIK%, WRT$)
200     WRT$ = "WAVE END 7":        CALL IBWRT(KIK%, WRT$)
210 '   ------------------------------------------------------------------------
220 '   Read Waveform from oscilloscope
230 '   ------------------------------------------------------------------------
240     WRT$ = "PAUSE ON":          CALL IBWRT(KIK%, WRT$)
250     WRT$ = "WAVE OUT CH1":      CALL IBWRT(KIK%, WRT$)
260     CALL IBRDI(KIK%, WAVDAT%(0), CNT%)
270     WRT$ = "PAU OFF":           CALL IBWRT(KIK%, WRT$)
280 '   ------------------------------------------------------------------------
290 '   Data Conversion
300 '   ------------------------------------------------------------------------
310     FOR I% = CNT% / 2 - 1 TO 0 STEP-1
```


90.8.31
9047755

```
320       WAVDAT%(I% * 2+1) = ((WAVDAT%(I%) AND &HFF00) /
   &H100 AND &HFF)
330       WAVDAT%(I% * 2) = WAVDAT%(I%) AND &HFF
340     NEXT I%
350 '   ------------------------------------------------------------------------
360 '   Wave Form Drawing for CGA/640*200 Monochrome
370 '   ------------------------------------------------------------------------
380     SCREEN 2, 0
390     LINE (0, 0)-(250, 100), 1,B
400     PSET (0, (228 - WAVDAT%(0)) / 2), 1
410     FOR I% = 1 TO 1023
420       LINE - (I% / 4, (228 - WAVDAT%(I%)) / 2), 1
430     NEXT I%
440     LOCATE 20, 1: PRINT "Press any key to Text Mode"
450     WHILE INKEY$ = "": WEND
460     SCREEN 0, 3
470 END
```

(Comments)

100 Declare integer array WAVDAT%() and secure data area.
110 Specify the Byte Count for waveform transfer.
120~130 Open device"COM7000", and store a unit descriptor in KIK%.
140 Execute Selected Device Clear (SDC).
160 Send "EOI ONLY" command.
170 Set to Storage Mode.
180 Specify Binary Format for waveform data.
190~200 Specify block area for transfer.
240 Turn on Pause so that waveform data can be sent.
250 Request CH1 waveform output.
260 Receive waveform data, and store in WAVDAT%() array.
270 Turn off Pause so that next waveform can be acquired.

310~340 Binary data has a size of 8 bits, while BASIC's integer format has a size of 16 bits. Therefore, data format must be converted to 16 bit size. Store the LOW-BYTE in even field of WAVDAT%(), and store HIGH-BYTE in odd field of WAVDAT%().
380 Set video mode to 640*200 (CGA) Graphics Mode.

90.8.31
9047156

390 Draw a box.
400~430 Draw the waveform.
440~460 Wait for pressing any key, and change to 80*25 text mode.

:Note for QuickBASIC (ver4.0) user:
Replace line# 260 with:
260 CALL IBRDI(KIK%, WAVDAT%(), CNT%)

:Note for QuickBASIC (ver3.0) user:
Replace line# 260 with:
260 CALL IBRDI(KIK%, VARPTR(WAVDAT%(0)), CNT%)

:About Block Transfer

It also is possible to send only part of the above waveform data, by dividing the total address into 8 blocks by using the "WAVE START" and "WAVE END" commands, and by sending data in the unit of block. The relationships between data address and blocks are as shown in the following:

Block 0	Address	0 ~ 127
Block 1	Address	128 ~ 255
Block 2	Address	256 ~ 383
Block 3	Address	384 ~ 511
Block 4	Address	512 ~ 639
Block 5	Address	640 ~ 767
Block 6	Address	768 ~ 895
Block 7	Address	896 ~ 1023

For block transfer, modify statements as shown in the following example to program(1.6) and change the number of byte count (CNT%).

Example:
To receive block 4 only, replace line #110, 190, and 200 with:

```
110  CNT% = 128
190  WRT$ = "WAVE START 4":      CALL IBWRT(KIK%, WRT$)
200  WRT$ = "WAVE END 4":        CALL IBWRT(KIK%, WRT$)
```

[2] Program to send data (binary) to oscilloscope.

'90.8.31
9047557

Append the following program(1.7) to program(1.6) by BASIC's MERGE statement. In this example, WAVDAT%() array is transfered to REF1 memory of the oscilloscope.

Program (1.7) ---------- APPENDANT ----------

```
470 '   ------------------------------------------------------------------------------
480 '   Data Conversion
490 '   ------------------------------------------------------------------------------
500     FOR I% = 0 TO CNT% / 2 - 1
510       IF WAVDAT%(I% * 2+1)>&H7F THEN WAVDATAT% (I% * 2+1) =
        WAVDAT%(I% * 2+1) OR &HFF00
520       WAVDAT%(I%)=(WAVDATAT%(I% * 2) AND &HFF) OR
        (WAVDAT%)(I% * 2+1) * &H100)
530     NEXT I%
540 '   ------------------------------------------------------------------------------
550 '   Write Waveform from PC
560     ------------------------------------------------------------------------------
570     WRT$ = "PAUSE ON":          CALL IBWRT(KIK%, WRT$)
580     WRT$ = "WAVE IN REF1":      CALL IBWRT(KIK%, WRT$)
590     CALL IBWRTI(KIK%, WAVDAT%(0), CNT%)
600     FOR I% = 0 TO 1000: NEXT I%
610     WRT$ = "REF1 ON":           CALL IBWRT(KIK%, WRT$)
620     WRT$ = "PAU OFF":           CALL IBWRT(KIK%, WRT$)
630 END
```

(Comments)

500~530 Binary data has a size of 8 bits, while BASIC's integer format has a size of 16 bits. Therefore, data format must be converted to 8 bit size. Integrate the LOW-BYTE and the HIGH-BYTE and store them in WAVDAT%() array.

570 Turn on Pause so that waveform data be sent.

580 Request REF1 waveform input.

590 Send waveform data.

600 Timer(few millisecond) is required after waveform sending.

610 Turn on REF1.

620 Turn off Pause so that next waveform can be acquired.

:Note for QuickBASIC (ver4.0) user:

Replace line# 590 with:

90.8.31

9047758

```
    590     CALL IBWRTI(KIK%, WAVDAT%(), CNT%)
```

:Note for QuickBASIC (ver3.0) user:

```
    Replace line#  590 with:
    590     CALL IBWRTI(KIK%, VARPTR(WAVDAT%(0)), CNT%)
```

:About Block Transfer

As in case of waveform reception, part of waveform data can be sent by using "WAVE START" and "WAVE END" commands.

Specify a pause period of several milliseconds between completion of data transfer and execution of the next command (such as for "OFF" of PAUSE).

(9) Step Control

This section introduce examples of programs for storing panel setting into step memories (0~99).In this simple method,programmable control for up to 100 types of oscilloscope panel setting can be realized.

[1] To store panel setting on step memories

Program (1.8)

```
100 UDNAME$ = "COM7000"
110 CALL IBFIND(UDNAME$, KIK%)
120 CALL IBCLR(KIK%)
130 '
140     FOR STEPNUM% = 0 TO 99
150         CALL IBLOC(KIK%)
160         PRINT "Step Number ="; STEPNUM%
170         PRINT "Set up panel, and press any key."
180         WHILE INKEY$ = "":  WEND
190         WRT$ = "STEP" + STR$(STEPNUM%) + "WRITE"
200         CALL IBWRT(KIK%, WRT$)
210         FOR I% = 0 TO 1000: NEXT I%
220     NEXT STEPNUM%
230 END
```

(Comments)

100~110 Open device "COM7000",and store a unit descriptor in KIK%.

120 Execute Selected Device Clear (SDC).

90.8.31

9047759

```
140     The loop from 0 to 99.
150     Execute GO To Local (GTL).
160     Display the current step number.
170~180 Set panel and wait for pressing any key.
190     Concatenate command:  "STEP xx WRITE".
200     Send the concatenated command string.(stored now!)
210     Timer
```

Note:
When in the local mode, although you may adjust the vertical position, horizontal position, trigger level, hold off, and trace separation controls, the adjustment data cannot be stored in the step memories. If you want to store the adjustment data in the step memories, adjust the controls in the Remote mode and then directly execute the step command "STEP xx WRITE" Keeping Remote mode.

[2] To recall panel setting from step memories

Program (1.9)

```
100 UDNAME$ = "COM7000"
110 CALL IBFIND(UDNAME$ , KIK%)
120 CALL IBCLR(KIK%)
130 '
140     WHILE 1
150         INPUT "Step Number = ", STEPNUM%
160         IF STEPNUM% < 0 OR STEPNUM% > 99 THEN BEEP: GOTO 190
170         WRT$ = "STEP" + STR$(STEPNUM%)
180         CALL IBWRT(KIK%, WRT$)
190     WEND
200 END
```

(Comments)

```
100~110 Open device "COM7000", and store a unit descriptor in KIK%.
120     Execute Selected Device Clear (SDC).
150     Receive step number from PC keyboard.
160     Check the range of step number.
170     Concatenate command: "STEP xx ".
180     Send the concatenated command string.(recalled now!)
140~190 WHILE 1~WEND is an infinite loop.
```


'90、8、31
90 4 760

(10) Example of SINGLE TRIGGER STANDBY by SRQ Processing

If the oscilloscope is set in storage SINGLE TRIGGER STANDBY status, string of waveform data in memory automatically starts as the triggering is effected. When storing in all addresses is finished, SRQ is generated. Thus, completion of data acquisition can be known by trapping the SRQ signal. An example of reception program is shown in the following:

Program (1.10)

```
100 UDNAME$ = "COM7000"
110 CALL IBFIND(UDNAME$ , KIK%)
120 CALL IBCLR(KIK%)
130         ON PEN GOSUB 1000
140         PEN ON
150 '
160     WRT$ = "EOI ONLY":              CALL IBWRT(KIK%, WRT$)
170     WRT$ = "MODE STORAGE":          CALL IBWRT(KIK%, WRT$)
180     WRT$ = "ATRIGGER MODE SINGLE": CALL IBWRT(KIK%, WRT$)
190 '
200     WHILE 1   WEND
210 END
1000 '  ------------------------------------------------------------------------
1010 '  SRQ Interrupt Routine
1020 '  ------------------------------------------------------------------------
1030         CALL IBRSP(KIK%, SPR%)
1040         IF SPR% AND &H10 THEN PRINT "Acquisition End !"
1050         CALL IBCLR(KIK%)
1060         WRT$ = "ATRIGGER MODE SINGLE": CALL IBWRT(KIK%, WRT$)
1070         PEN ON
1080     RETURN
```

(Comments)

100~110 Open device"COM7000", and store a unit descriptor in KIK%.
120 Execute Selected Device Clear (SDC).
130~140 Enable SRQ event trap, and specify processing routine to be followed when SRQ is generated.
160 Send "EOI ONLY" command.
170 Set to Storage mode.

90.8.31
9047761

```
180     Set to SINGLE TRIGGER STANDBY status.
200     Infinite loop
1000    This subroutine may be invoked when SRQ is generated.
1030    Execute Serial Polling, and store the Status Byte in SPR%.
1040    If the 4th bit of SPR% are active, display acqisition
          completion message.
1050    Execute Selected Device Clear(SDC).
1060    Set to SINGLE TRIGGER STANDBY status again.
1070    Enable SRQ event trap again.
1080    Return from the subroutine.
```

'90.8.31

90476Z

6.6.2 Examples of Programming for Model 9826 Computer of HP

(1) Initial Setting

Set an address for the Model 9826 (personal computer used as controller) and that for the oscilloscope with GP-IB switches ⑬.
For this programming example, set them as shown in the following table.

	Address	Delimiter
MODEL 9826	0	CR LF
COM7×××A	2	CR LF

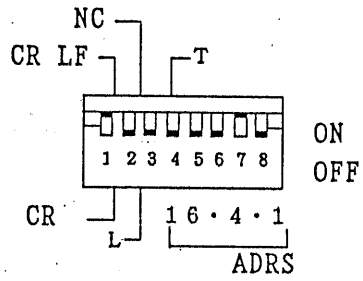

(2) Programming Example for Panel Control

This programming example is for controlling the oscilloscope from the computer keyboard to the functions the same with those made with the oscilloscope panel controls. In response to the prompter "COMMAND? " displayed on the computer, enter commands (characters for the required functions) from the keyboard. Of the Execution Example of Program (2.1), enter the underlined characters. Symbol ↵ denotes the ENTER key (line feed key).

Program (2.1)

```
10  DIM Command$ [100]
20  ABORT 7
30  REMOTE 7
40  ASSIGN @Com TO 702
50  INPUT "COMMAND ? ",Command$
60  OUTPUT @Com;Command$
61  WAIT 1
62  CLEAR @Com
70  GOTO 50
80  END
```

(Comments)

10 Declare array and secure data area.
20 Initialize interface.
30 Set REN to true.
40 Assign attribute.

'90. 8. 31
8943288A

```
50  Receive command entered from keyboard.
60  Send command received from keyboard.
61  Timer
62  Send device clear command for in case of error.
    (This statement may be deleted if not required.)
70  Go to statement 40 to receive next command.
```

Remarks: If an invalid command is given, an error message "GPIB ERR" is displayed on the oscilloscope and an SRQ is generated. To cope with this, there are two methods: One is to release the SRQ by stopping the program once and running it again so that the interface is initialized. The other is to use a command (such as statement 62) irrespective of occurrence of errors. If a device clear command is received when the processing for the command sent by statement 60 is in progress, the processing is aborted and completed. In order to wait until the processing is complete, statement 61 "Timer" should be inserted.

Execution Example of Program (2.1)

① To select CH1 input coupling:

COMMAND?	CHANNEL1 COUPLING AC↵
Abbreviation	CH1 COU AC↵

② To select storage mode:

COMMAND?	MODE STORAGE↵
Abbreviation	MOD STO↵

③ To set to PAUSE:

COMMAND?	PAUSE ON↵
Abbreviation	PAU ON↵

④ To set to SAVE:

COMMAND?	SAVE CHANNEL1 REFERENCE1↵
Abbreviation	SAV CH1 REF1↵

Of other panels also, the functions of the controls can be dictated through the computer keyboard. That is, all commands except "WAVE IN" and "WAVE OUT" can be given through the computer keyboard.

'90.8.31

89432 9A

(3) Programming Examples to Read Panel Setting and Measured Values

Examples of programs to read the panel setting values and measured values, and to reset the system automatically when an invalid command is given
are described below.

Program (2.2)

```
10  DIM Command$ [100],Dat$ [100]
20  ABORT 7
30  REMOTE 7
40  ASSIGN @Com TO 702
50  INPUT "COMMAND ? ",Command$
60  OUTPUT @Com;Command$
70  ENTER @Com;Dat$
80  PRINT Dat$
90  GOTO 50
100 END
```

(Comments)

10 Declare array and secure data area.
20 Initialize interface.
30 Set REN to true.
40 Assign attribute.
50 Receive command entered from keyboard.
60 Send command received from keyboard.
70 Receive setting value or other data.
80 Display the received setting value or other data.
90 Go to statement 50 to receive next command.

If an invalid command is given in the above program, it will stop at statement 70 and an SRQ is generated. Therefore, a program to release the SRQ must be added.

Program (2.3)

```
10  DIM Command$ [100]
20  ABORT 7
30  REMOTE 7
40  ASSIGN @Com TO 702
41  ON INTR 7 GOTO Srq_rou
42  ENABLE INTR 7;2
```


'90.8.31

89433OA

```
50  INPUT "COMMAND ? ",Command$
60  OUTPUT @Com;Command$
61  WAIT .5
70  ENTER @Com;Dat$
80  PRINT Dat$
90  GOTO 50
100  !
110  Srq_rou: !
120                DISABLE INTR 7
130                Stb= SPOLL(@Com)
140                WAIT .5
150                CLEAR @Com
160                PRINT "SRQ/GP-IB ERROR"
170                ENABLE INTR 7;2
180                GOTO 50
190  END
```

(Comments)

10 The same with that of Program (2.2)
20 The same with that of Program (2.2)
30 The same with that of Program (2.2)
40 The same with that of Program (2.2)
41 Specify processing routine to be employed when SRQ is generated.
42 Enable SRQ reception.
50 The same with that of Program (2.2)
60 The same with that of Program (2.2)
61 If an invalid command is sent, an error is caused and an SRQ is generated. Allow a period for generating the SRQ.
70 The same with that of Program (2.2)
80 The same with that of Program (2.2)
90 The same with that of Program (2.2)
100
110 SRQ processing routine.
120 Disable SRQ reception.
130 Perform serial polling.
140 Timer
150 Clear device.
160 Display error message.
170 Enable SRQ reception again.
180 Go to statement 50 and receive next command.

'90.8.31
89433 1A

Execution Example of Program (2.3)

① Setting state of CH1

COMMAND?	CHANNEL1 COUPLING? ↵
Abbreviation	CH1 COU? ↵
Display ex.	DC

② Setting state of MODE

COMMAND?	MODE? ↵
Abbreviation	MOD? ↵
Display ex.	REAL

③ To set to ATIME

COMMAND?	ATIME? ↵
Abbreviation	ATI? ↵
Display ex.	10US

Of other panels also, the functions of the controls can be dictated through the computer keyboard. The underlined items of the above commands are those to be manually entered through the keyboard. That is, all commands except "WAVE IN" and "WAVE OUT" can be given through the computer keyboard.

(4) Programming Example to Set Panel Controls and to Read Setting Values

This program is a modified one of Program (2.3) so that setting of panel controls also can be done.

Program (2.4)

```
10  DIM  Command$ [100],Dat$ [100]
20  ABORT 7
30  REMOTE 7
40  ASSIGN @Com to 702
41  ON INTR 7 GOTO Srq_rou
42  ENABLE INTR 7;2
50  INPUT "COMMAND ? ",Command$
60  OUTPUT @Com;Command$
61  WAIT .5
62  IF Command$ [LEN(Command$ )]< > "? " THEN 50
70  ENTER @Com;Dat$
```


'90.8.31

89433 2A

```
80  PRINT Dat$
90  GOTO 50
100  !
110  Srq_rou: !
120              DISABLE INTR 7
130              Stb= SPOLL(@ Com)
140              WAIT .5
150              CLEAR @ Com
160              PRINT "SRQ / GP-IB ERROR"
170              ENABLE INTR 7;2
180              GOTO 50
190  END
```

(Comments)

```
10  The same with that of Program (2.3)
20  The same with that of Program (2.3)
30  The same with that of Program (2.3)
40  The same with that of Program (2.3)
41  The same with that of Program (2.3)
42  The same with that of Program (2.3)
50  The same with that of Program (2.3)
60  The same with that of Program (2.3)
61
62  If the command is not of the type which calls for reading of
    setting value or other data, go to statement 50 and wait for the
    next command.
70  The same with that of Program (2.3)
80  The same with that of Program (2.3)
90  The same with that of Program (2.3)
100
110  SRQ processing routine
120  The same with that of Program (2.3)
130  The same with that of Program (2.3)
140  The same with that of Program (2.3)
150  The same with that of Program (2.3)
160  The same with that of Program (2.3)
170  The same with that of Program (2.3)
180  The same with that of Program (2.3)
```

90.8.31

89433A

(5) Examples of Commands for Control of Cursors and Reading of Measured Values

Examples of commands for control of cursors and reading of values measured with cursors, using the program (2.4) are given below.

① "CURSOR MODE" command, with program of (2.4)

COMMAND?	CURSOR MODE VOLT↵
Abbreviation	CUR MOD VOL↵

② "CURSOR DELTA" command, with program of (2.4)

COMMAND?	CURSOR DELTA 50↵
Abbreviation	CUR DEL 50↵

Note: Even when in the remote mode, the cursors can be vernier-controlled with the READOUT control.

③ "CURSOR DATA?" command, with program of (2.4)
Moving the cursors with the READOUT control, read the measured value.

COMMAND?	CURSOR DATA? ↵
Abbreviation	CUR DAT? ↵
Display ex.	12.34 E-3

The underlined items of the above commands are those to be manually entered through the keyboard. For "↵", press the ENTER key.

(6) Examples of Commands for Control of DVM and Counter, and Reading of Measured Values

Examples of commands for control of the DVM and counter and reading of the measured values, using the program (2.4) are given below.
When in the remote mode with GP-IB, the DVM and the counter can be ON/OFF-controlled independently.

① "DVM MODE" command, with program of (2.4)

COMMAND?	DVM MODE AC↵
Abbreviation	DVM MOD AC↵

② "DVM DATA?" command, with program of (2.4)

COMMAND?" DVM DATA?↵

Abbreviation DVM DAT?↵

Display ex. 12.34 E-3

③ "COUNTER" command, with program of (2.4)

COMMAND? COUNTER ON↵

Abbreviation COU ON↵

④ "COUNTER DATA?" command, with program of (2.4)

COMMAND? COUNTER DATA?↵

Abbreviation COU DAT?↵

Display ex. 12.34 E-6

The underlined items of the above commands are those to be manually entered through the keyboard. For "↵", press the ENTER key.

(7) Examples of reading the measured data by status byte or SRQ

Programming examples for reading the measured data of the DVM or Counter by means of the status byte or SRQ are introduced below.

The DVM bit or Counter bit of the status byte is cleared as the measured data is cleared. No clearing of the status byte by means of device clear is needed.

① Data read by polling

Data can be read by executing serial polling as required and judging the completion of DVM or Counter measurement from the contents of the status byte.

Program (2.5)

```
100       ASSIGN @Com TO 702
110       ABORT 7
120     Start:!
130             OUTPUT @Com;"COU ON"
140             OUTPUT @Com;"DVM ON"
150             OUTPUT @Com;"SRQ OFF"
```


'90.8.31

89433SA

```
160     Mes_lop: !
170         REPEAT
180             Int_dat=SPOLL(@Com)
190             PRINT "--SENCE DATA = ";INT_dat
200         UNTIL BINND(Int_dat,12)
210       !-----------------------------------------------------------------------------
220             IF BINAND(Int_dat,4) THEN
230                     OUTPUT @Com;"COUNTER DATA?"
240                     ENTER @Com;Cntr$
250                     PRINT TAB(25);"COUNTER = ";Cntr$
260             END IF
270             IF BINAND(Int_dat,8) THEN
280                     OUTPUT @Com;"DVM DATA?
290                     ENTER @Com;Dvm$
300                     PRINT TAB(25);"   DVM  = ";Dvm$
310             END IF
320       !
330           WAIT  .5
340         GOTO Mes_lop
350       !-----------------------------------------------------------------------------
360       END
```

(comments)

```
100     Assign attributes.
110     Initialize interface.
130     Turn on Counter.
140     Turn on DVM.
150     Inhibit originating SRQ.
180     Execute serial polling, and read status byte.
190     Display status byte (to verify it by observation on screen).
200     If bit 2 or 3 of status byte is "0", then go to 170.
220-260 If bit 2 of status byte is "1", then read and display Counter
        data.
270-310 If bit 3 of status byte is "1", then read and display DVM data.
330     Wait for 0.5 sec for ease of observation on screen.
340     Repeat
```

② Data read by SRQ

'90.8.31

9047763

Data can be read by turning on the DVM or Counter, originating an SRQ when measurement is over, and checking the contents of status byte when the SRQ is received.

Program (2.6)

```
100       ASSIGN @Com TO 702
110       ABORT 7
120       ON INTR 7 GOSUB Int_srq
130       ENABLE INTR 7;2
140     Start:!
150             OUTPUT @Com;"COU ON"
160             OUTPUT @Com;"DVM ON"
170             OUTPUT @Com;"SRQ MEASURE ON"
180             OUTPUT @Com;"SRQ ON"
190     Mes_lop:!
200             PRINT "WAIT SRQ"
210             GOTO Mes_lop
220       !-----------------------------------------------------------------------------
230     Int_srq:!
240         Int_dat=SPOLL(@Com)
250           PRINT "-----  INT -----"
260             IF BINAND(Int_dat,4) THEN
270                     OUTPUT @Com;"COUNTER DATA?"
280                     ENTER @Com;Cntr$
290                     PRINT TAB(25);"COUNTER = "; Cntr$
300             END IF
310             IF BINAND(Int_dat,8) THEN
320                     OUTPUT @Com;"DVM DATA?
330                     ENTER @Com;Dvm$
340                     PRINT TAB(25);"   DVM  = ";Dvm$
350             END IF
360           ENABLE INTR 7;2
370           RETURN
380         !-----------------------------------------------------------------------------
390         END
```

'90.8.31

9004764

(Comments)

100 Assign attributes.
110 Initialize interface.
120 Specify a routine to be followed in response to SRQ.
130 Enable SRQ receive.
150 Turn on Counter.
160 Turn on DVM.
170 Enable SRQ origination by DVM or Counter measurment end.
180 Allow SRQ output.
190-210 Repeat "WAIT SRQ" message output.
(Wait for SRQ.)
230 Execute SRQ processing routine.
240 Execute serial polling.
250 Display "---INT---".
260-300 If bit 2 of status byte is "1", then read and display measured data of Counter.
310-350 If bit 3 of status byte is "1", then read and display measured data of DVM.
360 Enable SRQ receive.

(8) Examples of Programs for Transfer of Waveform Data

This section introduces programs to send waveform data acquired in the storage mode to the host computer or other devices. The programs (2.1) through (2.4) are not usable for this purpose. Examples of programs for individual cases are shown below.

① Program to send data (binary) from oscilloscope to Model 9826 of HP

Program (2.7)

```
10  ABORT 7
20  REMOTE 7
30  ASSIGN @Com TO 702
40  INTEGER Wavdat (1023)
50  OUTPUT @Com;"MOD STO"
60  OUTPUT @Com;"PAU ON"
70  OUTPUT @Com;"WAV COD BIN"
80  OUTPUT @Com;" WAV OUT CH1"
90  ENTER @Com USING "%, B";Wavdat (*)
```


'90.8.31
904765

```
100 END
```

(Comments)

10 Initialize interface.
20 Set REN to true.
30 Assign attrivute.
40 Declare array and secure data area.
50 Set to STORAGE mode.
60 Turn on PAUSE so that waveform data can be sent.
70 Specify binary for waveform data codes.
80 Request CH1 waveform output.
90 Enter transferred data item into array variable Wavdat (*), sequentially.

Remarks: Block Transfor

It also is possible to send only a part of the above waveform data, by dividing the total addresses into eight blocks by using the "WAVE START" and "WAVE END" commands, and by sending data in the unit of block. The relationships between data addresses and blocks are as shown in the following.

Block	0	.....	Addresses	0 ~ 127
Block	1	.....	Addresses	128 ~ 255
Block	2	.....	Addresses	256 ~ 383
Block	3	.....	Addresses	384 ~ 511
Block	4	.....	Addresses	512 ~ 639
Block	5	.....	Addresses	640 ~ 767
Block	6	.....	Addresses	768 ~ 895
Block	7	.....	Addresses	896 ~ 1023

Example: To read block 0 only

```
71 PRINT @Com; "WAV STA 0"
72 PRINT @Com; "WAV END 0"
```

In this example the number of data addresses is 128. Therefore, "Wavdat (1023)" of statement 40 should be replaced with "Wavdat 127".

② Program to send data (binary) from Model 9826 to oscilloscope

For the above program it is assumed that the preceding program of (2.7) has been executed and waveform data has already been stored in Wavdat (*).

Program (2.8)

```
100  OUTPUT @Com;"MOD STO"
110  OUTPUT @Com;"REF1 ON"
120  OUTPUT @Com;"PAU ON"
130  OUTPUT @Com;"WAV COD BIN"
140  OUTPUT @Com;"WAV IN REF1"
150  OUTPUT @Com USING "B";Wavdat(*) END
160  END
```

(Comments)

100 Set to STORAGE mode.
110 Turn on REFERNCE 1.
120 Turn on PAUSE to transfer waveform data.
130 Specify binary for waveform data codes.
140 Specify waveform data entry to REFERENCE 1.
150 Transfer data sequentially from array variable Wavdat (*).

As in the case of ①, part of waveform data can be sent by using "WAVE START" and "WAVE END" commands.

Specify a pause period of several milliseconds between completion of data transfer and execution of the next command (such as for "OFF"of PAUSE).

(9) Step Control

This section introduces examples of programs for panel settings making use of step memory (0 - 99). In this simple method, programmable control for up to 100 types of oscilloscope panel settings can be realized.

① To write panel setting on step memory

Program (2.9)

```
10  ABORT 7
20  ASSIGN @Com TO 702
```


'90.8.31
89433 7A

```
30  Stepno=0
40  LOCAL 7
50  PRINT "STEP No = " , Stepno
60  INPUT "PANNEL SET & HIT ENTER" , A$
70  Command$ ="STE "&VAL$ (Stepno9&" WRI"
80  REMOTE 7
90  OUTPUT @Com;Command$
100  IF Stepno<99 THEN Stepno=Stepno+1
110  WAIT 1
120  GOTO 40
130  END
```

(Comments)

10 Initialize interface.
20 Assign attribute.
30 Initialize step number.
40 Set to LOCAL mode.
50 Display step number.
60 Set panel and wait for pressing of ENTER key.
70 Connect commands.
80 Set REN to true.
90 Write panel setting on step memory.
100 Increment step by 1.
110 Timer
120 Go to statement 40 and repeat setting.

(Note)

When in the LOCAL mode, even though you may adjust the vertical position, horizontal position, trigger level, holdoff, and trace separation controls, the adjustment data cannot be written on the memory. If you want to write the adjustment data on the step memory, adjust the controls in the REMOTE mode and then directly execute the step command without returning to the LOCAL mode.

② To read panel setting data on step memory

Program (2.10)

```
10  ABORT 7
20  REMOTE 7
30  ASSIGN @Com TO 702
```


'90.8.31
89433 8A

```
40  INPUT "STEP No = " , Stepno
50  IF Stepno<0 OR Stepno>99 THEN 40
60  Command$ ="STE " &VAL$ (Stepno)
70  OUTPUT @Com;Command$
80  GOTGO 40
90  END
```

(Comments)

10 Initialize interface.
20 Set REN to true.
30 Assign attribute.
40 Enter step number.
50 Check step number.
60 Connect commands.
70 Read panel setting data which is written on step memory.
80 Go to statement 40 and repeat setting.

'90. 8、31

(10) Example of SRQ Processing

If the oscilloscope is set in a storage SINGLE TRIGGER STANDBY status, storing of waveform data in memory automatically starts as the triggering is effected. When storing in all addresses is over, an SRQ is generated. Thus, completion of data acquisition can be known by receiving the SRQ signal. An example of reception program is shown in the following.

Program (2.11)

```
10  ABORT 7
20  REMOTE 7
30  ASSINGN @Com TO 702
40  ON INTR 7 GOTO Acq_end
50  OUTPUT @Com;"MOD STO"
60  OUTPUT @Com;"PAU OFF"
70  OUTPUT @Com;"ATR MOD SIN"
80  ENABLE INTR 7;2
90  GOTO 90
100  !
110  Acq_end: !
120            DISABLE INTR 7
130            Stb=SPOLL(@Com)
140            PRINT "ACQUISITION END ! "
```


89433 39A

```
150             WAIT 1
160             GOTO 70
170  END
```

(Comments)

10 Initialize interface.
20 Set REN to true.
30 Assign attribute.
40 Specify processing routine to be followed when SRQ is generated.
50 Set to STORAGE mode.
60 Release PAUSE.
70 Set to SINGLE TRIGGER STANDBY status.
80 Enable SRQ reception.
90 Wait for SRQ generation.
100
110 SRQ processing routine.
120 Disable SRQ reception.
130 Perform serial polling.
140 Timer.
150 Display acquisition completion message.
160 Go to statement 70 and set again to SINGLE TRIGGER STANDBY status.

90.8.31

89434OA

7. INITIAL MODE SETTING AND DIAGNOSTIC FUNCTIONS

7.1 Initial Mode Setting

The oscilloscope is a microprocessor-based instrument and all of its functions are dictated by the microprocessor. When CPU operation has become abnormal due to external noise or other causes, It is reset to normal operation by performing initial mode setting.

For initial mode setting of COM7201A, COM7101A or COM7061A, press the SUB CURSOR SW (32) while keeping the 2ND FUNCTION KEY (43) pressed. For that of COM7200A, COM7100A or COM7060A, press the SUB CURSOR SW (32) while the CRT is in the beam find state after pressing once and releasing the INTEN control (2).

When initial mode setting is done, the oscilloscope is reset as follows:

COUPLING:	DC
VERT MODE:	CH1, CH2, ALT, BW ON
CH1, CH2 VOLT/DIV:	0.5V/DIV CH3, CH4 0.5V/DIV
TIME/DIV:	10μs/DIV
HORIZ MODE:	A
SWEEP MODE:	AUTO
TRIG SOURCE:	V-MODE CH1
TRIG LEVEL:	AUTO
TRIG CPLG:	AC
TRIG SLOPE:	"+"
CURSOR:	ΔT (50μs)
MODE:	REAL (for COM7201A, COM7101A and COM7060A only)

If the abnormal state is not remedied by the above initial mode setting, turn off the oscilloscope and then repeat the initial mode setting procedure. If the abnormal state is not remedied still, check the conditions of use of the oscilloscope and, if they are found to be normal, consult your Kikusui agent.

894341

7.2 Diagnostic Functions

The oscilloscope is incorporated with two types of self diagnostic functions: one is that automatically done when power is turned on and the other is that effected when the 2ND FUNCTION KEY (43) is pressed.

When power of the oscilloscope is turned on, the contents of memory which stores data of panel setting and internal circuit calibration values are checked and, if any abnormal values are found, they are automatically adjusted to normal values (see Section 8.1). When the adjustment is over, the panel setting is identical with that effected by the initial mode setting and a message "INIT SYS DATA" is displayed at the center of the CRT. This message goes off as you press twice the INTEN control (2).

Other memory units than the above can be checked by pressing the READOUT control (33) while keeping the 2ND FUNCTION KEY (43) pressed. For COM7200A, COM7100A and COM7060A, the INTEN control (2) acts as a second function key as in the case of initial mode setting. In this case, messages as shown in Figure 7.1 are displayed on the CRT for about 3 seconds.

If error messages as mentioned below are displayed when self diagnosis is done, if the same error messages are still displayed even when self diagnosis is repeated, or if self calibration is continuously repeated when power is turned on, check the conditions of use of the oscilloscope, and, if they are normal, consult your Kikusui agent.

- RAM ERR
- CHR RAM ERR
- SEQ RAM ERR
- LED RAM ERR
- ROM CHECK SUM ERR

8943342

Note: "SUB CPU" and "GP-IB" are displayed
for COM7201A, COM7101A and COM7060A only.

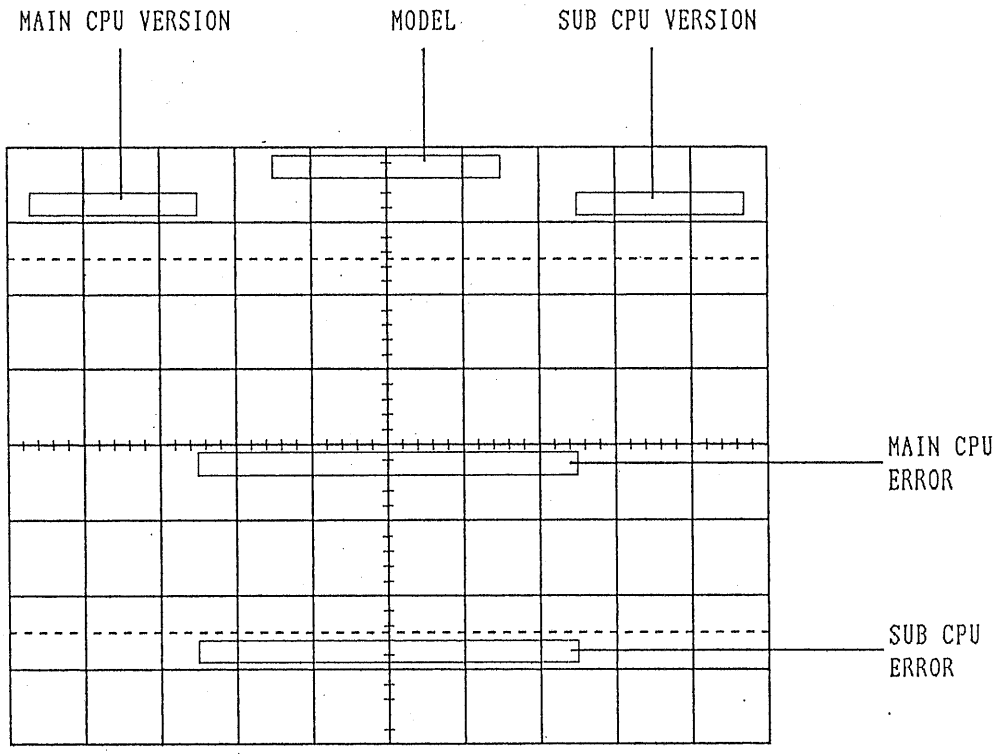

Figure 7.1 Diagnostic Messages Displayed on CRT

894343

8. CALIBRATION AND MAINTENANCE

8.1 Self Calibration

The basic functions of the oscilloscope, such as vertical axis DC offset, vertical axis deflection factor, and time base, are automatically adjusted by the micropocessor of the oscilloscope, eliminating the requirments of special calibration instruments and operator's skills. Calibration is accomplished rapidly.

For self calibration of COM7201A, COM7101A or COM7060A, press the DVM SW (34) while keeping pressed the 2ND FUNCTION KEY (43) . For that of COM7200A, COM7100A or COM7060A, press the DVM SW (34) while the CRT is in the beam find status after pressing the INTEN control (2) and releasing it.

When self calibration is in progress, a message "SELF CAL" and the contents of calibration are displayed on the CRT. Calibration time is approximately 40 to 50 seconds for COM7200A, COM7100A or COM7060A, or approximately 2 to 5 minutes for COM7201A, COM7101A or COM7060A.

The items of self calibration are as follows:

- o CH1 and CH2 DC offset, position center, and deflection factor
- o A sweep and B sweep accuracies, and starting positions.
- o DELAY time compensator offset
- o DVM offset, sensitivity
- o Adjustment of storage circuit

When errors are more than can be corrected by the self calibration, a message "SELF CAL ERR" is displayed. Repeat the self calibration and if the state is not remedied, consult your Kikusui agent.

The self calibration should be done when the oscilloscope is warmed up and stabilized (when a stabilization period of 1 hour or over has elapsed after turning on power). Although self diagnosis will be done automatically when power is turned on, it is most recommendable to perform the self calibration when a stabilization period od 1 hour or over has elapsed.

8943344

8.2 Inspection and Calibration

Although the oscilloscope is incorporated with automatic self calibration provision, it should be manually calibrated at appropriate intervals. Manual calibration of the oscilloscope requires special instruments and skills. It is recomended that your Kikusui agent for calibrate service of your oscilloscope.

Caution: Note that the oscilloscope employs a hazardously high voltage for its CRT and PCB.

8.3 Calibration Procedure

Calibration procedures of the oscilloscope are given below, excluding adjustment of high frequency characteristics and that of storage circuit. Do not attempt to make any adjustment other than those explained in the following.

(1) Removing the Case

To remove the case, proceed as follows: Remove the four studs (which act also as power cord takeups) and remove the rear panel. Holding the front panel, pull out the chassis unit from the case.

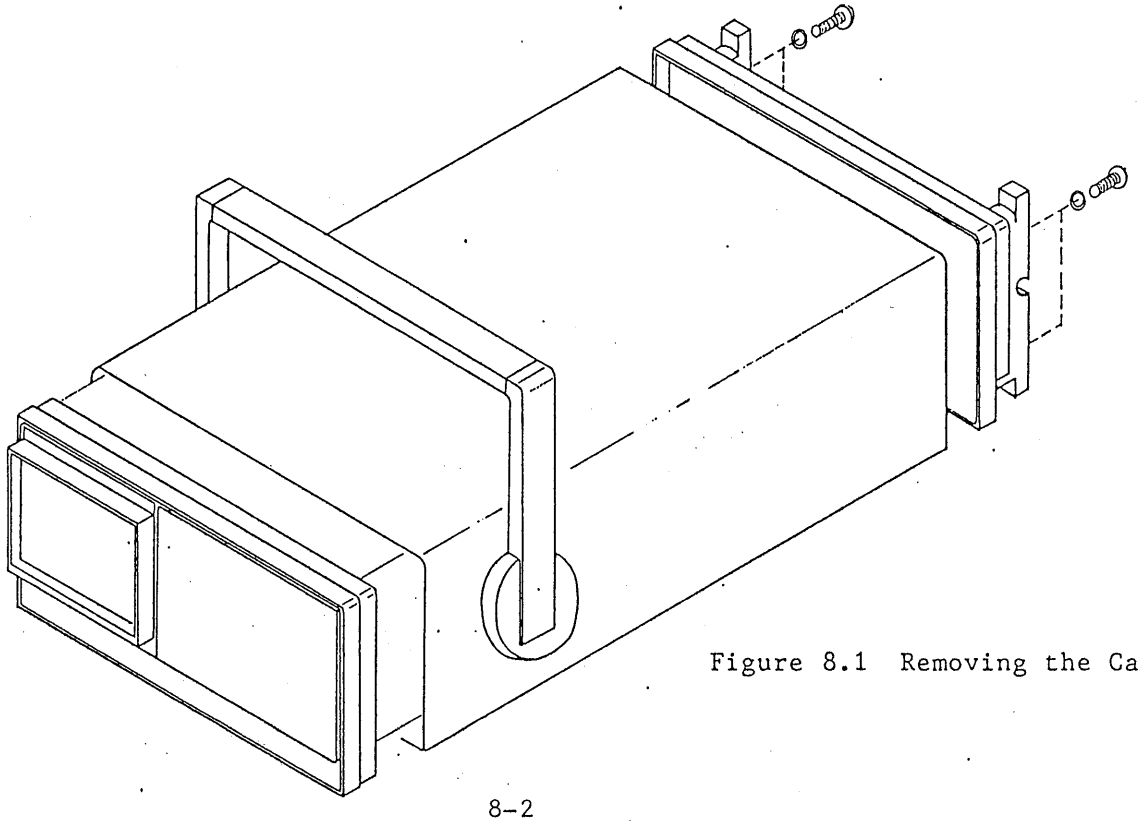

Figure 8.1 Removing the Case

894345

(2) Check and Adjustment of Supply Voltages

The items to be checked first of all when calibrating the oscilloscope are supply voltages. If they are not within the tolerances, adjust the +12V supply voltage and then check other voltages.

Nominal Supply Voltage	COM7060A, COM7061A, COM7100A, COM7101A	COM7200A, COM7201A
+140V	+135 to +145 V	+135 to +145 V
+70V	+69 to +72 V	-
+40V	-	+38 to +42 V
+12V	+11.90 to +12.10 V	+11.90 to +12.10 V
+5V (A)	+4.9 to +5.2 V	+4.9 to +5.2 V
+5V (D)	+4.9 to +5.3 V	+4.9 to +5.3 V
-12V	-11.90 to -12.10 V	-11.90 to -12.10 V
-2200V	-2150 to -2250 V	-2150 to -2250 V

The locations of the check points and controls are shown in Figure 8.2. Those for the -2200V supply is on PCB A6.

Note: When supply voltages are changed, they substantially affect vertical deflection factors and sweep time base. Be sure to perform self calibration and adjustments of the subsequent items after adjusting the supply voltages.

894346

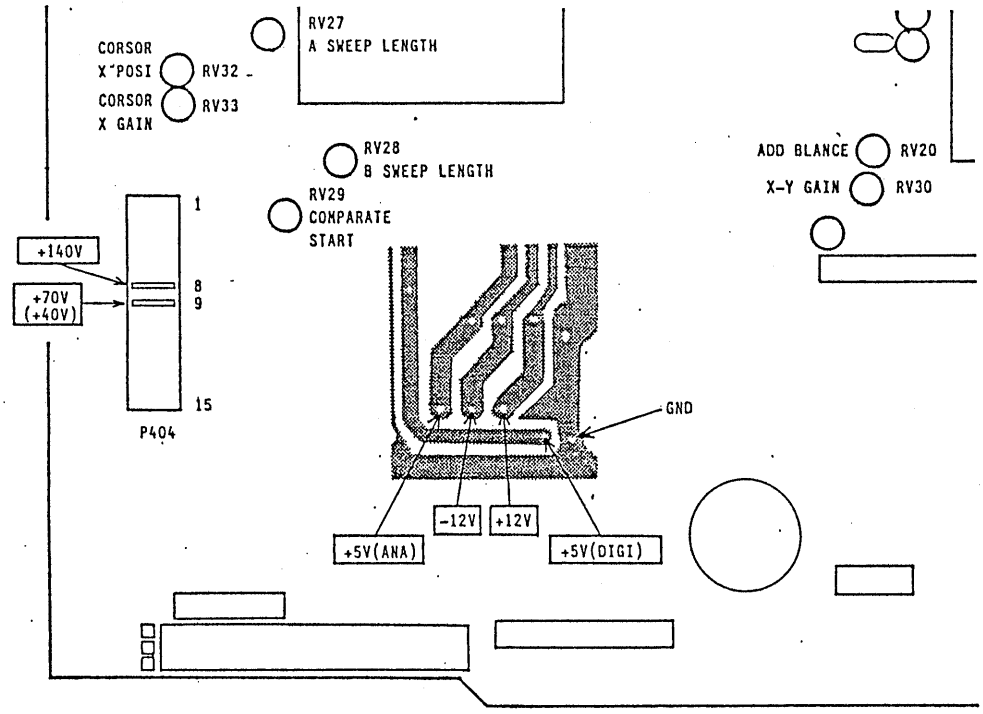

Figure 8.2 Locations of Supply Voltage Check Points and Controls

(3) Adjustment of Vref 30mV

This voltage is used as a reference voltage for self calibration. Adjust RV1 of PCB A4 so that the voltage across resistor R3 of PCB A4 becomes 30.01 to 29.99 mV.

034347

(4) Adjustment of CRT Circuits

o GEOMETRY

Adjust RV4 of PCB A6 so that the pattern displayed on the CRT becomes normal as shown in Figure 8.3.

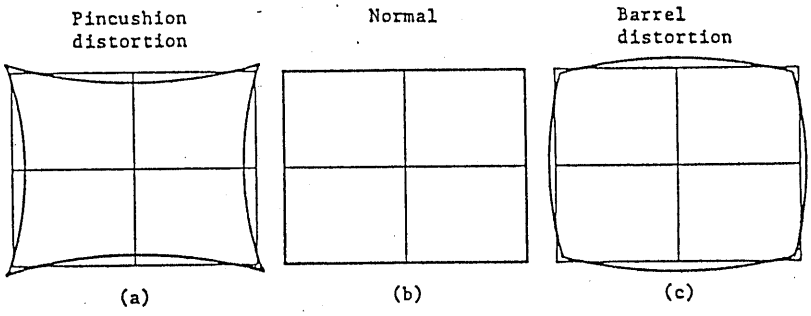

Figure 8.3 Patterns Displayed on CRT

o ASTIG HALATION

Display the beam spot at the center of CRT screen (X-Y mode) and the readout at peripheries, and adjust to best focussing the spot with the FOCUS control and ASTIG control (RV5 on PCB A6) and the readout with the FOCUS control and HALATION control (RV6 on PCB A6).

o SUB FOCUS

Set the FOCUS control at mid-position (noon position) and adjust RV3 of PCB A6 so that best focusing is obtained.

o SUB INTEN

Adjust RV2 of PCB A6 so that the spot (X-Y mode) disappears as the INTEN control is set at 10 o'clock position.

834348

(5) Adjustment of Vertical Axis (Y-axis) Gain

This adjustment is to adjust the Y-axis deflection factor to the self-calibrated value. Set the CH1 deflection factor to 10 mV/DIV, apply a calibration signal of 50 mV, and adjust RV3 of PCB A5 so that the signal is displayed with an amplitude of 5 DIV in the center of the CRT graticule.

(6) Adjustment of Horizontal Axis (X-axis) Gain

This adjustment is to adjust the X-axis deflection factor to the self-calibrated value. Set the time base at 1 ms/DIV, apply a time marker signal of 1 ms, and adjust RV7 of PCB A5 so that the 1st and 9th marker peaks are aligned with the corresponding graticule lines.

(7) Adjustment of Cursor X and Y GAIN and POSITION

Set ΔV cursor for the maximum vertical span and adjust RV21 of PCB A4 so that the cursor is displayed for 8 DIV on the CRT, and also adjust RV22 of PCB A4 so that the above state is attained with the POSITION control set at mid-position.

Set ΔT cursor for the maximum horizontal span and adjust RV33 of PCB A4 so that the cursor is displayed for 10 DIV on the CRT, and also adjust RV32 of PCB A4 so that the above state is attained with the POSITION control set at mid-position.

(8) Adjustment of ADD BAL

Adjust RV20 of PCB A4 so that the trace is displayed at the center of CRT when the traces of CH1 and CH2 are set at the center of CRT and the mode is changed to ADD.

8943349

(9) Adjustment of TRIG LEVEL CENTER

Apply a 50-kHz sine wave and adjust RV25 (A TRIG) and RV26 (B TRIG) of PCB A4 so that the trace for TRIG AUTO starts from the center of CRT.

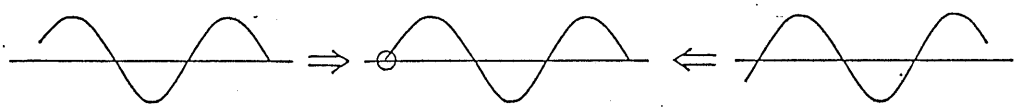

Figure 8.4 TRIG LEVEL CENTER

(10) Adjustment of TRIG DC OFFSET

Apply a 50-kHz sine wave to each of the channels, adjust the TRIG LEVEL control so that the trace starts at the center of CRT, and adjust the TRIG DC OFFSET control so that the starting point of trace does not change when the TRIG COUPLING switch is changed from AC to DC.

CH1	RV6 of PCB A4
CH2	RV8 of PCB A4
CH3	RV10 of PCB A4
CH4	RV12 of PCB A4

(11) Adjustment of CH3 GAIN and POSITION

Set the CH3 deflection factor to 0.1 V/DIV, apply a 0.5-V calibration signal, and adjust RV16 of PCB A4 so that the signal is displayed with an amplitude of 5 DIV on CRT. Next, set the INPUT COUPLING (14) switch to GND and adjust RV14 of PCB A4 so that the trace is displayed at the center of CRT with the CH3 POSITION control set at the mid position.

(12) Adjustment of CH4 GAIN and POSITION

In the same manner as in the case of CH3, adjust GAIN with RV17 of PCB A4 and POSITION with RV15 of PCB A4.

894350

(13) Adjustment of X-Y GAIN and CENTER

Set CH1 deflection factor at 10 mV/DIV, apply a 50-mV calibration signal, and adjust RV31 of PCB A4 so that the signal is displayed with an amplitude of 5 DIV in the X-Y mode.

Next, change the INPUT COUPLING (8) switch to GND and adjust RV30 of PCBA4 so that the spot is displayed at the center of CRT with the CH1 POSITION control (40) set at the mid position.

(14) Adjustment of CH1 SIG OUT OFFSET

Apply the CH1 SIG OUT (without 50-ohm termination) to the CH2 input. Set the CH2 deflection factor at 10 mV/DIV and adjust RV18 of PCB A4 so that the trace remains at the same position when the INPUT COUPLING (13) switch is changed from GND to DC.

(15) Adjustment of COMP START

Set the time base at 1 ms/DIV and check, by using a time marker signal, that the horizontal axis (X-axis) GAIN has been calibrated.

Set the A sweep to 1 ms/DIV and the B sweep to 10 μs/DIV, set the readout to ΔT 8.000 ms, and set the DISPLAY A mode to ALT.

Set INPUT to GND and adjust RV29 of PCB A4 so that the distance between the two spots on the CRT becomes 8 DIV. Then perform self calibration.

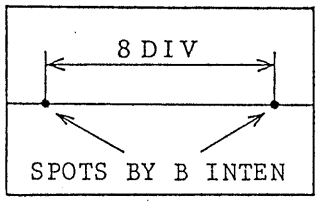

Figure 8.5 COMP START

894351

(16) Adjustment of SWEEP LENGTH

Set the time base at 1 ms/DIV and adjust RV27 (A sweep) and RV28 (B sweep) of PCB A4 so that the time base sweep length becomes 10.5 to 11.5 DIV.

(17) Adjustment of Time Base ×10 MAG GAIN

Set sweep time at 1 ms/DIV ×10 MAG, apply a 0.1-ms time marker signal, and adjust RV34 of PCB A4 so that the 1st and 9th peaks are aligned with the corresponding graticule lines.

(18) Adjustment of 5 ns, 2 ns, 1 ns COMPEN

For time base 50 ns, 20 ns, 10 ns/DIV ×10 MAG (or 5 ns, 2 ns, 1 ns/DIV ranges), apply sine wave signal of 50 MHz, 100 MHz or 200 MHz, and adjust linearity and sweep time with RV8 and CV5 of PCB A5. (Except COM7200A and COM7201A)

(19) Adjustment of ATT COMPEN Input Capacitance, and 1 mV COMPEN

Apply a 10-kHz pulse signal to each channel and adjust the ATT COMPEN and 1 mV COMPEN (CH1 and CH2) so that the displayed pulse wave rises up without overshoots or undershoots.

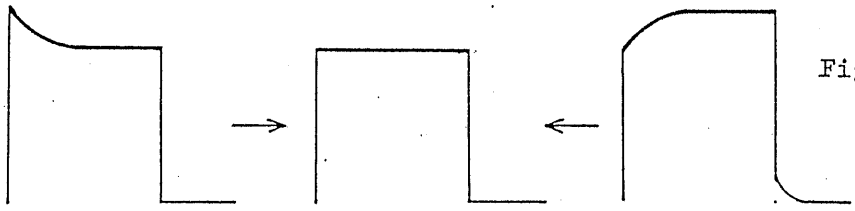

Figure 8.6
ATT COMPEN

	Adjustment of ATT COMPEN Input Capacitance and 1 mV COMPEN	
CH1, CH2	1/10 ATT (0.1 V/DIV)	1/100 ATT (1 V/DIV)
CH3, CH4	1/5 ATT (0.5 V/DIV)	

894352

Using a capacitance meter, adjust the input capacitance of attenuator of each channel to the same value with that of the reference range (1/1 ATT).

(20) Adjustment of DVM COMPEN

Adjust the CH1 deflection factor to 10 mV/DIV, apply a pulse wave of 50 mVp-p and 1 MHz, and measure the signal of U21 PIN NO. 16 using another oscilloscope. Adjust RV19 of PCB A4 so that the pulse wave rises up without overshoots or undershoots.

(21) Adjustment of Calibration Signal Voltage

Adjust RV1 of PCB A8 so that the voltage of the signal delivered to the CAL output terminal on the front panel of the oscilloscope becomes 0.5 Vp-p ±2%.

894353

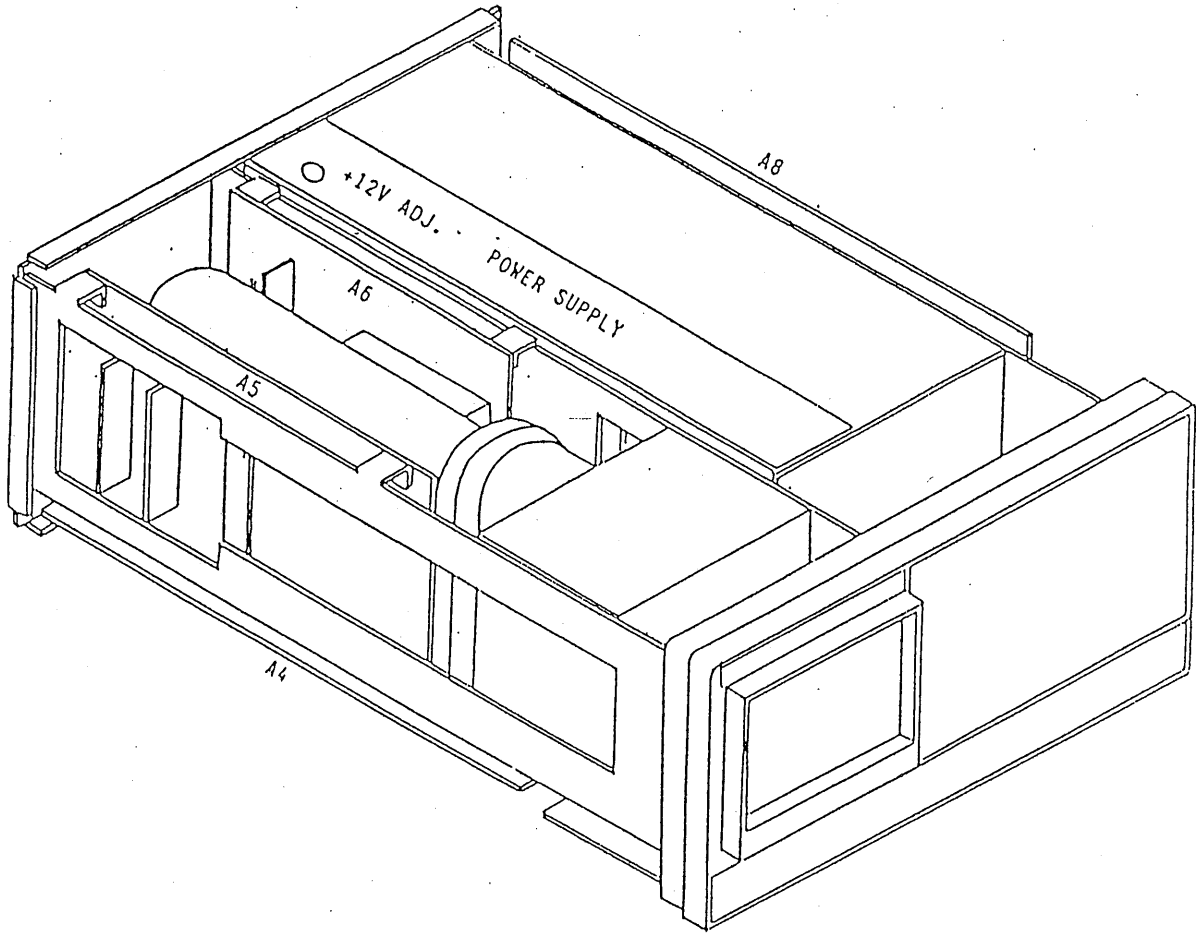

Figure 8.7 Locations of PCB's

894354

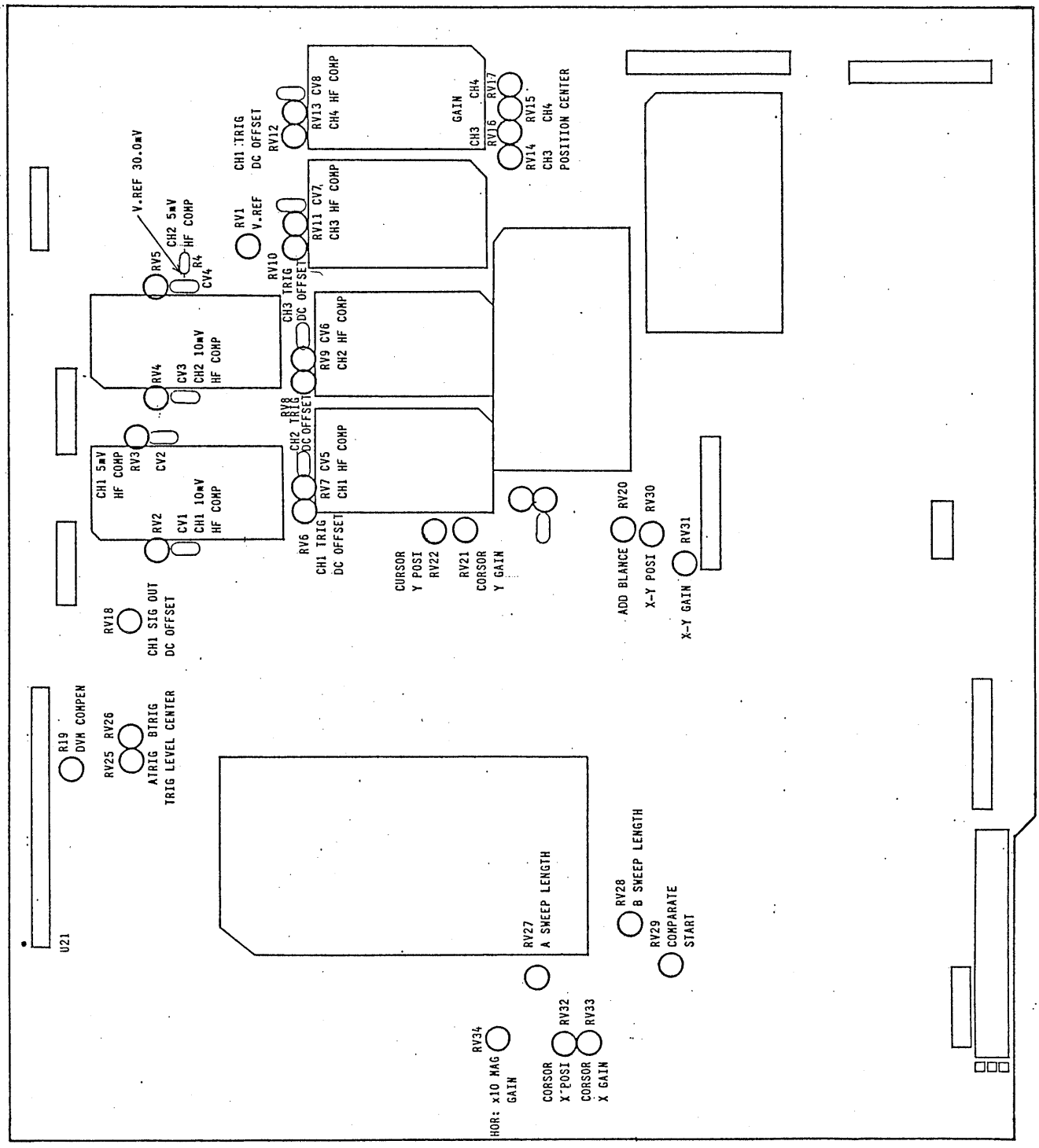

Figure 8.8 Layout of Controls on PCB A4

894355

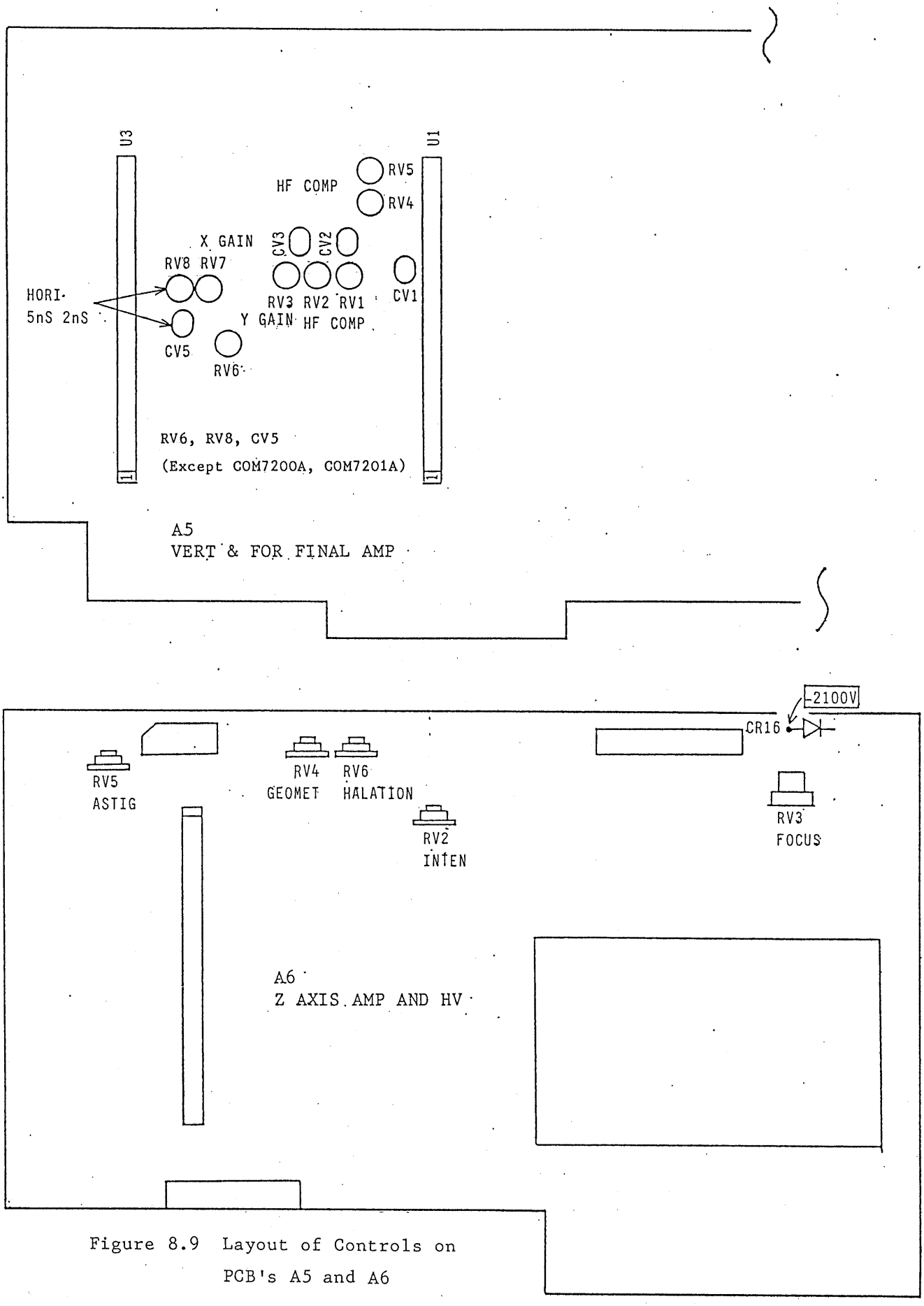

Figure 8.9 Layout of Controls on PCB's A5 and A6

894356

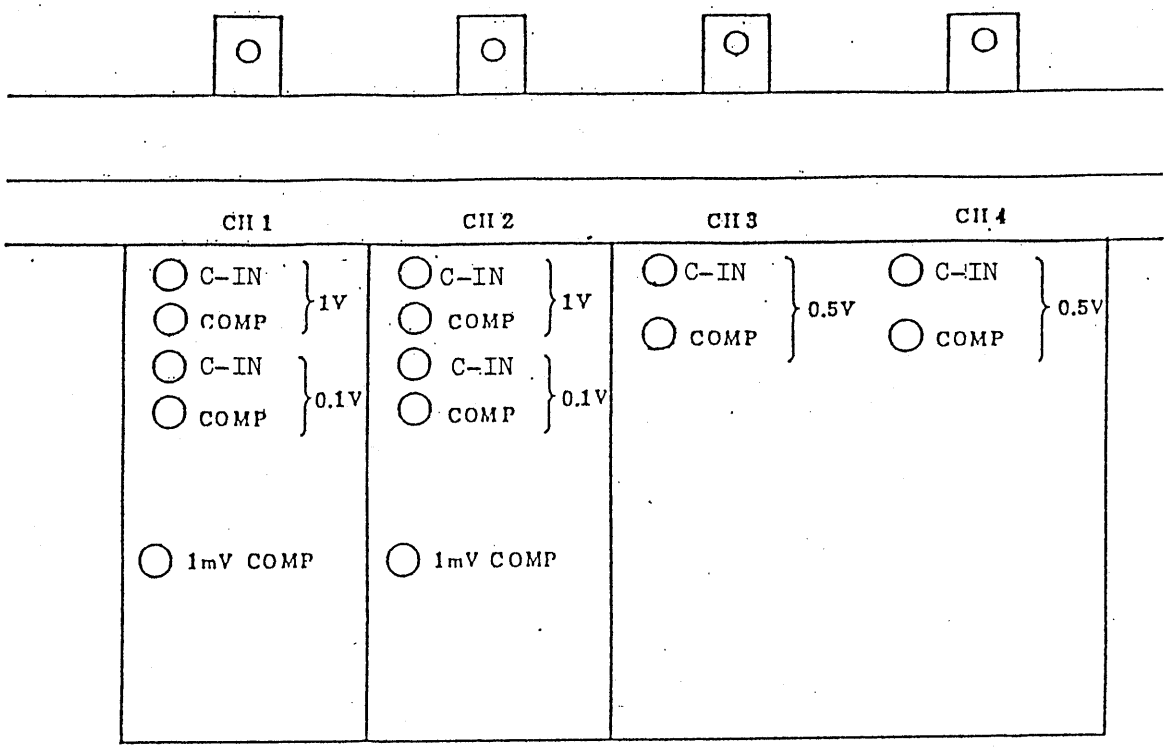

C-IN: Input capacitor

Figure 8.10 Locations of Attenuator Controls

894357 ☆